ANDANATORE RT 1000

(versione provvisoria)

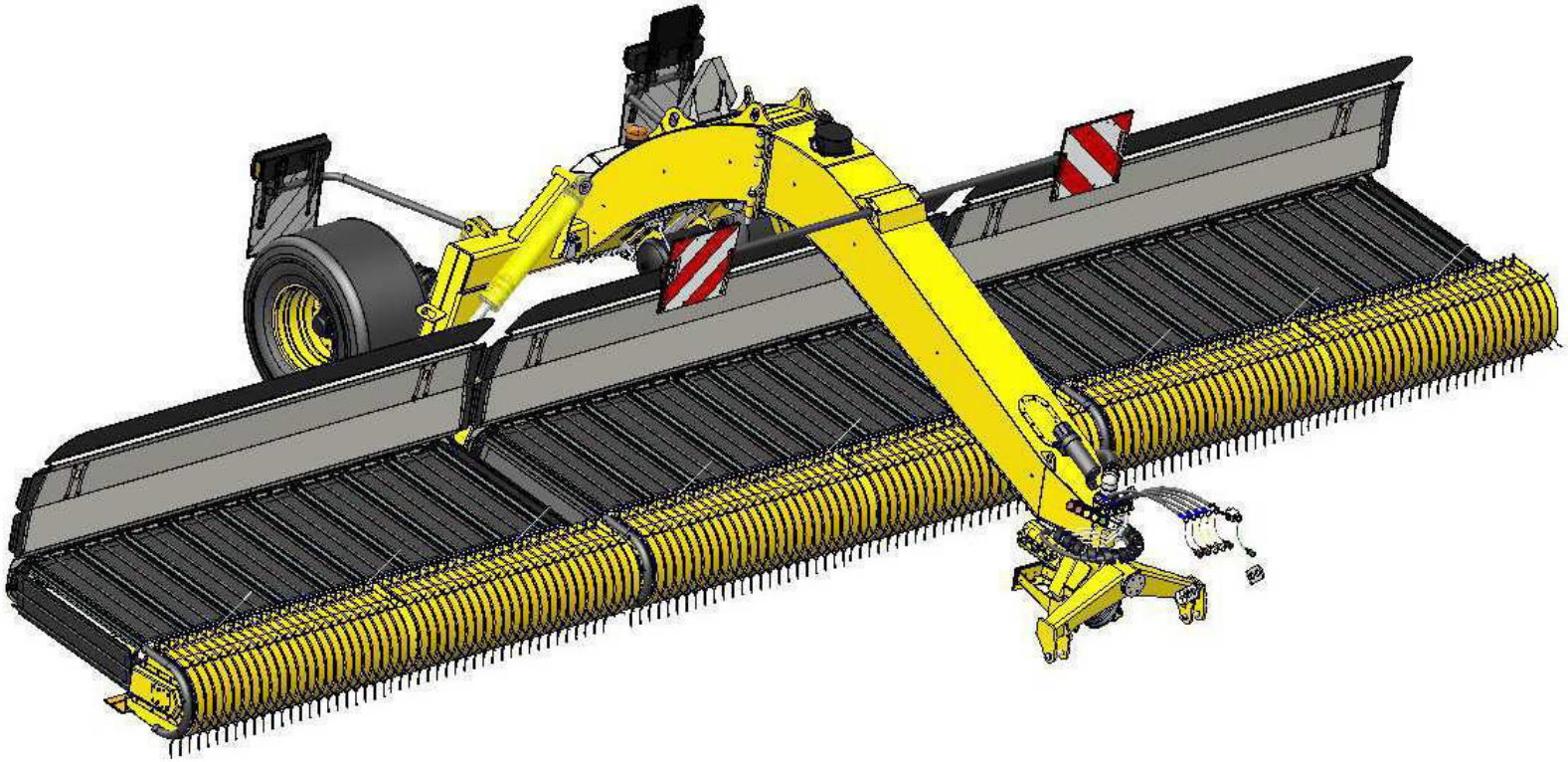

PROPRIETÀ RISERVATA - RIPRODUZIONE VIETATA

Manuale ricambi

RT 1000

ROC

R16000-0000-MA

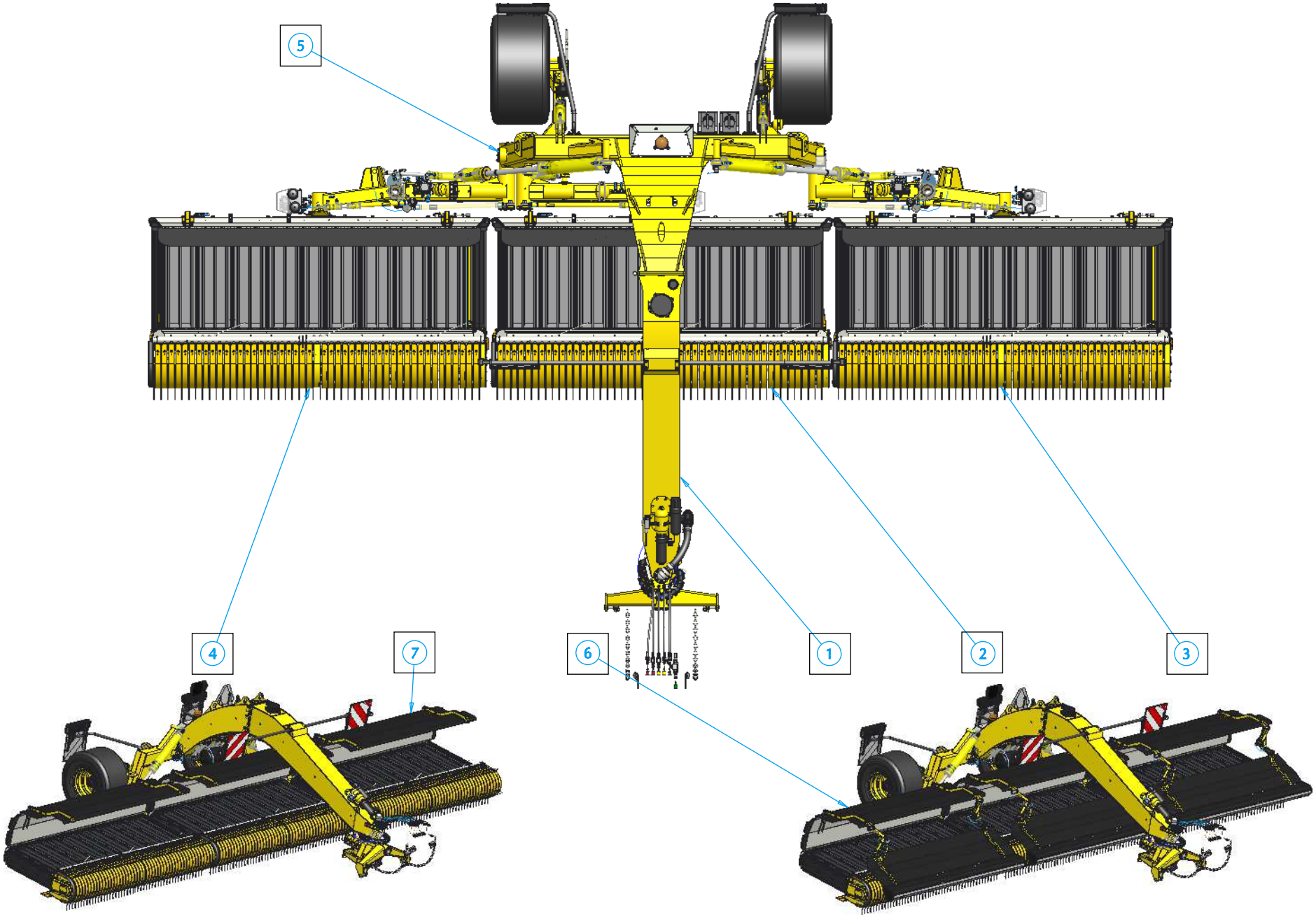

RT 1000 R16000-0000-MA

Ref	Code	Qt	Descrizione	Description	Designation	Beschreibung
1	R16200-0000	1	Vedi pag. B-1	See page B-1		
2	R23200-0000	1	Vedi pag. C-1	See page C-1		
3	R23300-0000	1	Vedi pag. D-1	See page D-1		
4	R23100-0000	1	Vedi pag. E-1	See page E-1		
5	R16000-0000	1	Vedi pag. A-4	See page A-4		
6	69 63	1	Kit cop.nastro e pickup *F-87	Belt/pickup cover kit*F-87		
7	70 14	1	Kit copert. nastro *F-93	Belt cover kit *F-93		

RT 1000

ROC

R16000-0000-MB

A-2

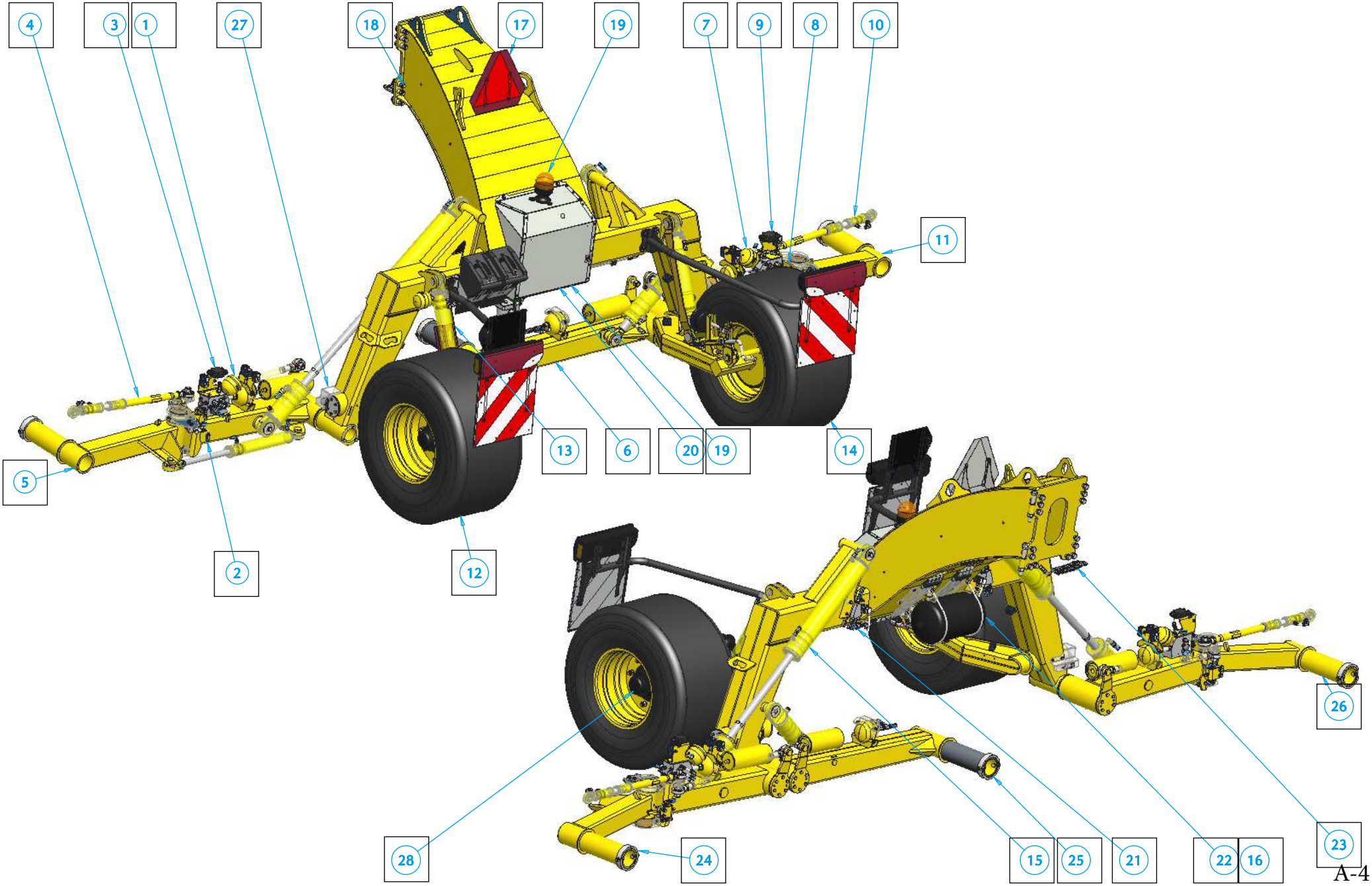

A-4

RT 1000 R16000-0000-MB

Ref	Code	Qt	Descrizione	Description	Designation	Beschreibung
1	R16000-0000_M1		Vedi pag. F-1	See page F-1		
2	R16000-0000_M2		Vedi pag. F-3	See page F-3		
3	R16000-0000_M3		Vedi pag. F-5	See page F-5		
4	R16000-0000_M4		Vedi pag. F-7	See page F-7		
5	R16000-0000_M5		Vedi pag. F-9	See page F-9		
6	R16000-0000_M6		Vedi pag. F-11	See page F-11		
7	R16000-0000_M7		Vedi pag. F-13	See page F-13		
8	R16000-0000_M8		Vedi pag. F-15	See page F-15		
9	R16000-0000_M9		Vedi pag. F-17	See page F-17		
10	R16000-0000_M10		Vedi pag. F-19	See page F-19		
11	R16000-0000_M11		Vedi pag. F-21	See page F-21		
12	R16000-0000_M12		Vedi pag. F-23	See page F-23		
13	R16000-0000_M13		Vedi pag. F-25	See page F-25		
14	R16000-0000_M14		Vedi pag. F-27	See page F-27		
15	R16000-0000_M15		Vedi pag. F-29	See page F-29		
16	R16000-0000_M16		Vedi pag. F-31	See page F-31		
17	R16000-0000_M17		Vedi pag. F-33	See page F-33		
18	R16000-0000_M18		Vedi pag. F-35	See page F-35		
19	R16000-0000_M19		Vedi pag. F-37	See page F-37		
20	R16000-0000_M20		Vedi pag. F-39	See page F-39		
21	R16000-0000_M21		Vedi pag. F-41	See page F-41		
22	R16000-0000_M22		Vedi pag. F-43	See page F-43		
23	R16000-0000_M23		Vedi pag. F-45	See page F-45		
24	R16000-0000_M24		Vedi pag. F-47	See page F-47		
25	R16000-0000_M25		Vedi pag. F-49	See page F-49		
26	R16000-0000_M26		Vedi pag. F-51	See page F-51		
27	R16000-0000_M27		Vedi pag. F-53	See page F-53		
28	R11002-0007_M		Vedi pag. F-85	See page F-85		

RT 1000

ROC

R16200-0000-M1

A-2

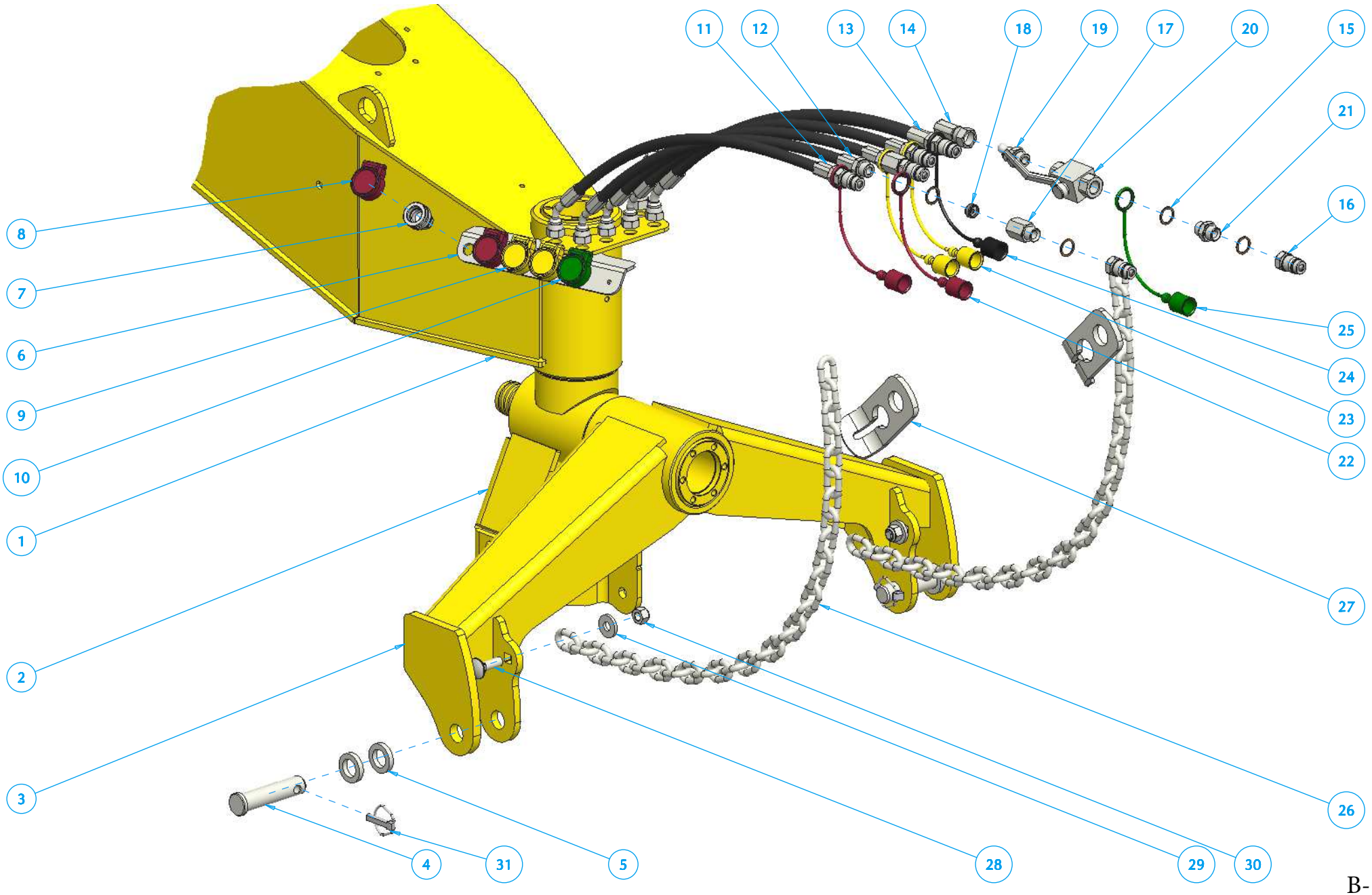

B-1

RT 1000

ROC

R16200-0000-M1

Ref	Code	Qt	Descrizione	Description	Designation	Beschreibung
1	66 05	1	Timone principale	RT 1000 main shaft		
2	60 78	1	Telaio portapompa	Pump holder frame		
3	60 14	1	Attacco a due punti	Two points hitch		
4	61 10	2	Perno Ø28 att due punti	Pin Ø28 two points hitch		
5	63 64	4	Distanziale Ø28.5x45	Spacer Ø28 5x45		
6	68 95	1	Piastra supp racc. rapidi	Fast joints holding plate		
7	36 01	5	Portainnesto rapido femm	Female fast conn. holder		
8	36 04	2	Tappo rosso portainn	Red cap for conn. holder		
9	36 03	2	Tappo giallo portainn	Yellow cap for conn. holder		
10	36 02	1	Tappo verde portainn	Green cap for conn. holder		
11	T0_02	1	Tubo R2 3/8	Hose R2 3/8		
12	T0_02	3	Tubo R2 3/8	Hose R2 1/2		
13	T0_03	1	Tubo R2 1/2	Hose R2 1/2		
14	T0_04	1	Tubo R2 1/2	Hose R2 1/2		
15	04 51	9	Rondella di rame 1/2 gas	Copper washer 1/2 gas		
16	03 00	6	Racc. rapido masc. 1/2 gas	1/2 gas male fast joint		
17	32 26	2	Colonnetta m/f 1/2 gas	1/2 gas male/female cable		
18	61 86	2	Strozzatore unid 1/2 gas	One dir. flow limiter 1/2 gas		
19	03 02	1	Niples 1/2 gas 7/8 J	Nipples 1/2 gas 7/8J		
20	20 57	1	Rubinetto 1/2 gas	1/2 gas cock		
21	00 95	1	Niples 1/2 -1/2 gas	Nipples 1/2 - 1/2 gas		
22	32 36	2	Tappo gomma rosso TF12	Rubber red cap TF12		
23	32 37	2	Tappo gomma giallo TF12	Rubber yellow cap TF12		
24	32 35	1	Tappo gomma nero TF12	Rubber black cap TF 12		
25	32 38	1	Tappo gomma verde TF12	Rubber green cap TF 12		
26	63 33	2	Catena di finec 30 anelli	30 rings limit switch chain		
27	63 23	2	Piastra aggancio catena	Hooking chain date		
28	34 22	2	Vite 14x45x10	Head square screw 14x45x10		
29	31 19	2	Rondella 14.5x35x5	Flat washer 14.5x35x5		
30	20 48	2	Dado autobb. M14 7473	Self-locking nut M14 7473		
31	23 91	2	Spina a scatto Ø11X40	Snap plug Ø 11x40		

RT 1000

ROC

R16200-0000-M2

A-2

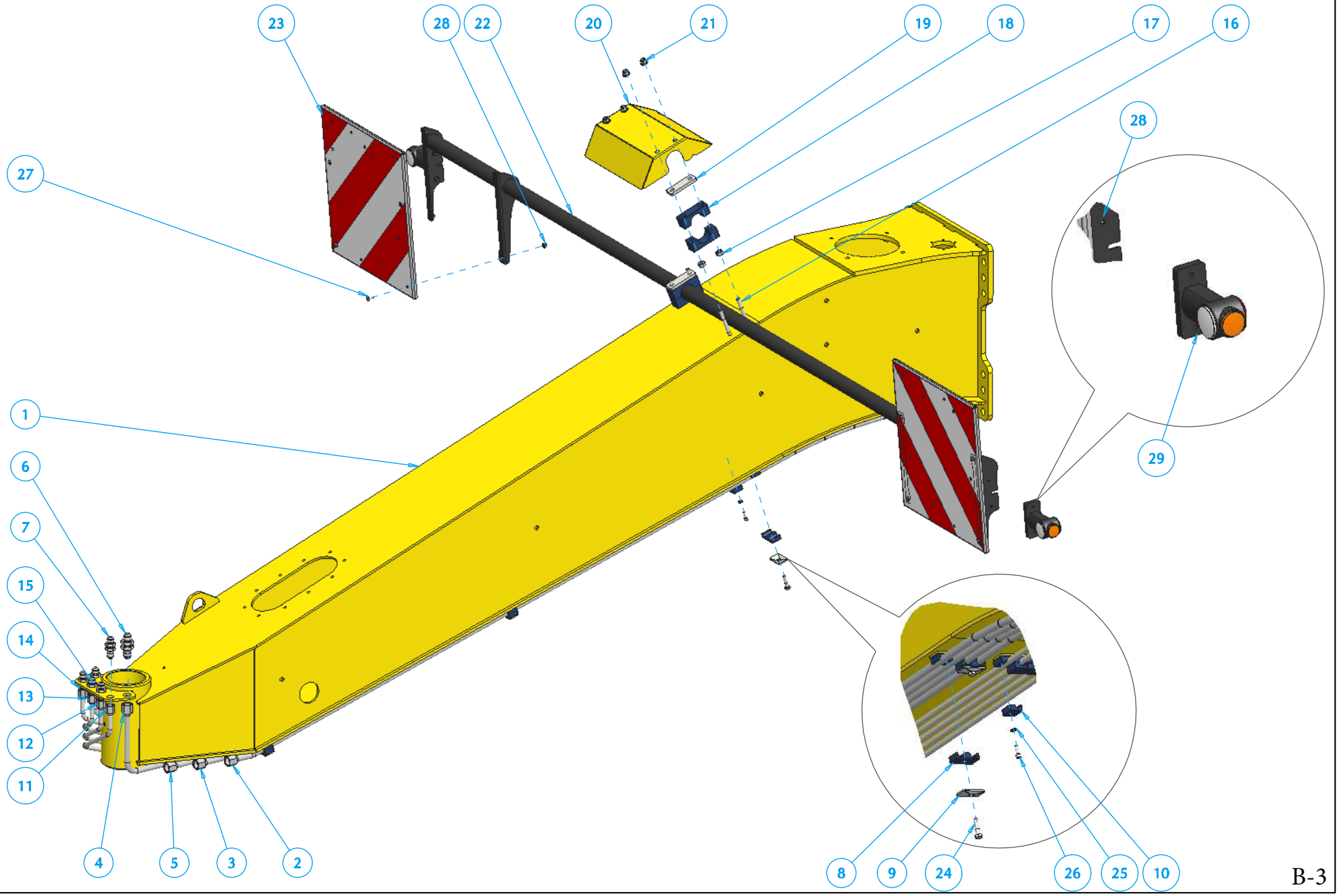

B-3

RT 1000

ROC

R16200-0000-M2

Ref	Code	Qt	Descrizione	Description	Designation	Beschreibung
1	66 05	1	Timone principale	RT1000 main shaft		
2	67 17	1	Tubo in ferro	Iron pipe		
3	67 16	1	Tubo in ferro	Iron pipe		
4	62 67	1	Tubo in ferro alzata ruote	Lifting wheels iron pipe		
5	62 68	1	Tubo in ferro azionam. DX	Right activation iron pipe		
6	18 06	1	Passa parete da 7/8 J	7/8 J feedthrough		
7	18 05	5	Passa parete da 3/4 J	3/4 feedthrough		
8	30 55	16	Fermatubo doppio CF2 Ø16	Double pipe clip CF 2 Ø16		
9	31 18	8	Piastra x ferma tubo CF2	Plate for pipe clip CF 2		
10	23 29	40	C 1 diam.12	C1 Ø12		
11	62 66	1	Tubo in ferro per frenatura	Iron pipe for braking		
12	62 65	1	Tubo in ferro apertura SX	Iron pipe left opening		
13	62 64	1	Tubo in ferro chiusura SX	Iron pipe left closing		
14	62 63	1	Tubo in ferro chiusura DX	Iron pipe right closing		
15	62 62	1	Tubo in ferro apertura DX	Iron pipe right opening		
16	35 08	4	Prigioniero M10X100	Stud M10x100		
17	02 97	4	Dado esag. UNI 5587 M10	High hex nut UNI 5587 M10		
18	34 76	4	Fermatubo CP3ø42.4 (coppia)	Pipe clip CP3 Ø 42.4 (couple)		
19	34 77	2	Piast. X fermat. CP3 30X84	Plate for pipe dip CP3 30x84		
20	66 42	1	Cofanetto di prot supp.pann	Protection case panel support		
21	22 29	4	Dado autobb. flan 10 6926	Fl.self-locking nut 106926		
22	66 15	1	Porta pannelli di sporg EU	Panels holder protrusion EU		
23	34 79	2	Pannello segnal. sporg.	Protrusion signal panel F/D		
24	23 25	8	Vite TE UNI5737 M8X35	Screw TE UNI5737 M8X35		
25	31 13	20	Rosetta UNI 6592 6.4X12.5	Washer UNI 6592 6.4X12.5		
26	14 15	20	Vite testa cilind. 6-20-U5931	Cyl.head screw 6-20-U5931		
27	34 49	8	Vite button flang. Ø 6x16	Flanged button screw Ø 6x16		
28	25 22	12	Dado autobl.flangiato M6 6926	Fl. self-locking nut M6 6926		
29	37 11	2	Fanalino di sporgenza a 3 led	Protr. headlight with 3 led		

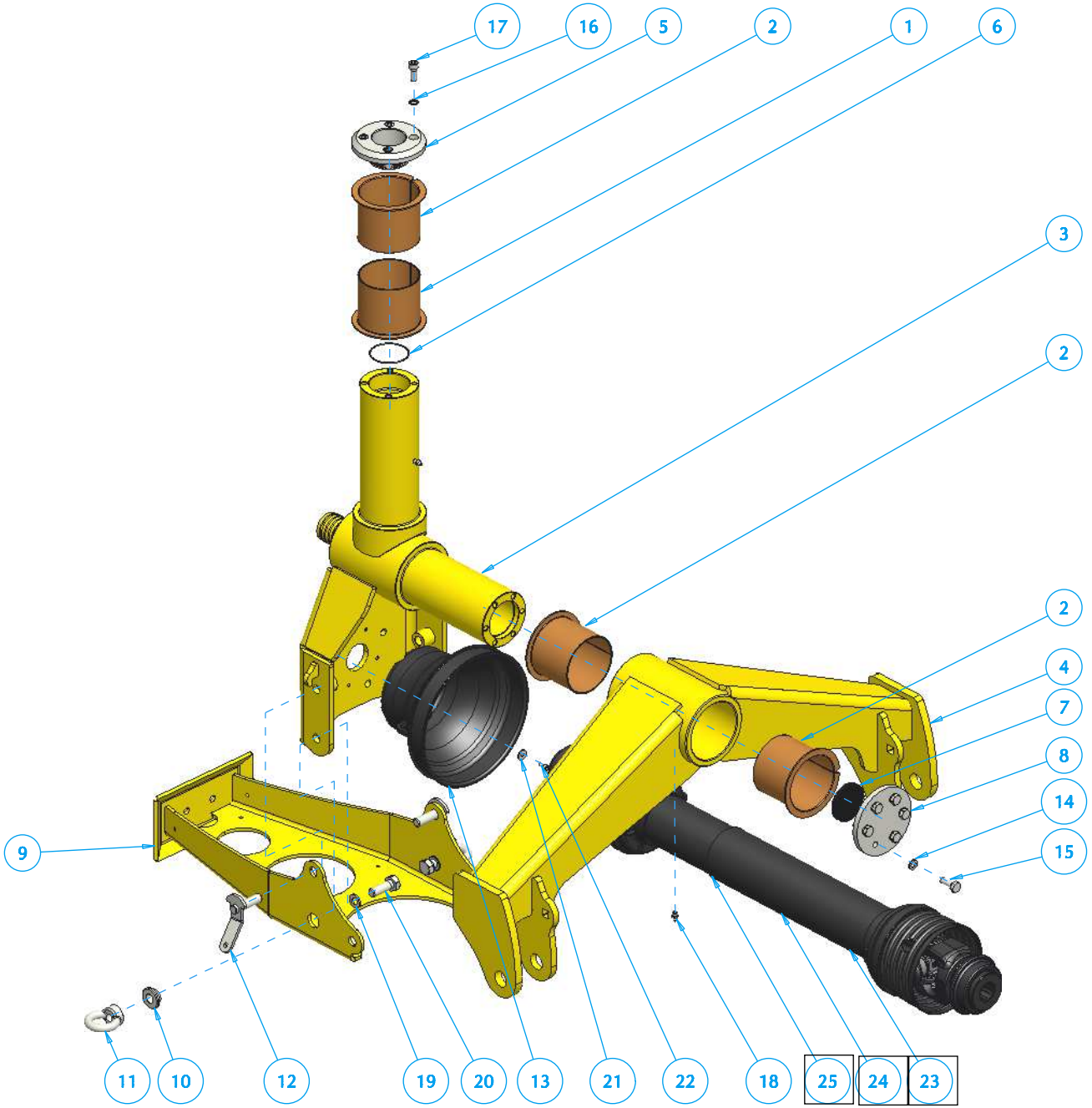
17
16
5
2
1
6
3
2
2
4
7
8
14
15
9
11
10
12
19
20
13
21
22
18
25
24
23

RT 1000

ROC

R16200-0000-M3

Ref	Code	Qt	Descrizione	Description	Designation	Beschreibung
1	61 97	1	Boccola 100x105-125x90	Bushing 100x105 - 125x90		
2	69 38	3	Boccola 100X105-125X90	Bushing 100x105 - 125x90		
3	60 78	1	Telaio portapompa	Pump holder frame		
4	60 14	1	Attacco a due punti	Two points coupling		
5	60 73	1	Tappo filettato portagirevole	Revolving threaded cap		
6	31 42	1	OR 838 = 61.9 x 68.9 x 3.5	OR 838 = 61.9x68.9x3.5		
7	23 16	1	Paraolio chiuso AEC 68/8	Closed seal AEC 68/8		
8	63 65	1	Tappo anteriore timone	Front shaft cap		
9	60 76	1	Piede X RT	RT foot		
10	61 09	2	Boccola supporto piede	Foot support bushing		
11	30 74	2	Golfare M 16	Ringbolt M16		
12	61 35	2	Perno bloccaggio piede	Foot locking pin		
13	34 31	1	Controcuffia Ø240x160	Shaft cone Ø 240x160		
14	03 13	6	Rondella spaccata rinf. Ø 10	Reinf. split washer Ø 10		
15	26 82	6	Vite TE int.fil.UNI 5739	Threaded screw UNI5739		
16	29 38	4	Rondella zigrinata Ø 10	Knurled washer Ø10		
17	25 12	4	Vite TCEI UNI5931 M10X25	Screw TCEI UNI 5931 M10X25		
18	30 54	2	Ingrassatore 8x1 dritto	Straight greaser 8x1		
19	24 62	2	Rosetta UNI 6592 13X24	Washer UNI 6592 13x24		
20	26 66	2	Vite TE int.fil.UNI 5739	Threaded screw UNI5739		
21	24 39	4	Rondella piana 6.5x18x2	Flat washer 6.5x18x2		
22	30 51	4	Vite TCEI UNI5931 M6X12	Screw TCEI UNI5931 M6X12		
23	60 42	1	Cardano 1" 3/8 z6 *B-17	Gimbal 1" 3/8 26		
24	60 41	1	Cardano 1" 3/8 z21 *B-19	Gimbal 1" 3/8 221		
25	62 80	1	Cardano 1" 3/4 z20 *B-21	Gimbal 1" 3/4 220		

RT 1000

ROC

R16200-0000-M4

A-2

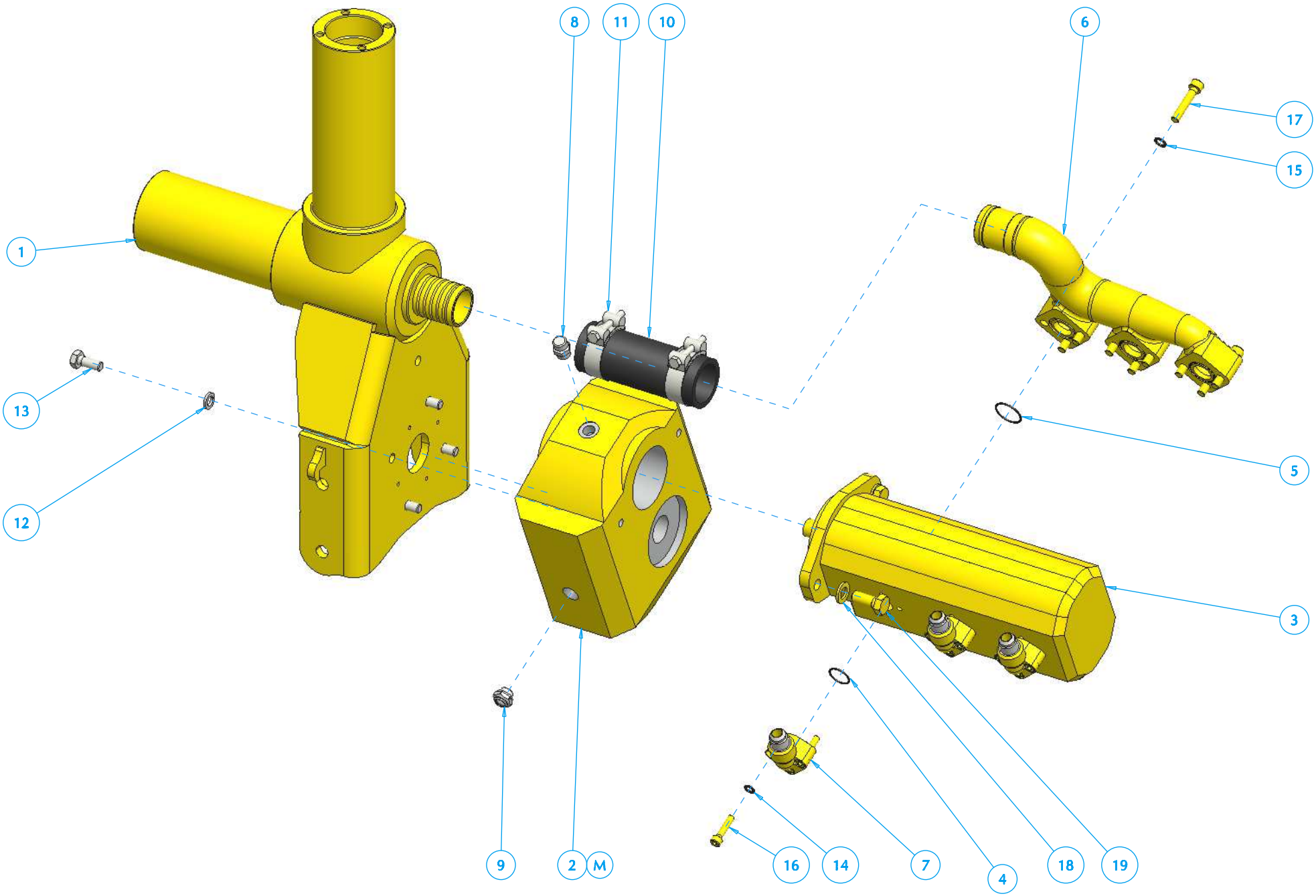

B-7

RT 1000

ROC

R16200-0000-M4

Ref	Code	Qt	*Descrizione*	*Description*	*Designation*	*Beschreibung*
1	60 78	1	Telaio portapompa	Pump holder frame		
2	61 59	1	Moltipl per 1000 giri	Multiplier for 1000 rpm		
3	60 90	1	Pompa tripla	Triple pump		
4	31 43	3	OR 132 = 23.8 x 29 x 2.6	OR 132 = 23.8x29x2.6		
4bis	71 35	1	Doppia pompa RT1000	Double pump RT100		
5	31 41	3	OR 124 = 31.4 x 36.6 x 2.6	OR 124 = 31.4x36.6x2.6		
6	61 73	1	Collettore aspirazione	Pump intake manifold 3		
7	35 65	3	Flangia x pompa da 7/8J	Flange for pump 7/8J 40x8.5		
8	06 38	1	Tappo sfiato da 3/8	Vent cap 3/8 gas for gearbox		
9	33 73	1	Tappo spia olio 3/8 gas	Oil light cap 318 gas		
10	T0_05	1	Tubo aspiraz. pompa Ø 50	Intake manifold hose Ø 50x165		
11	05 22	2	Collare AC-060-063 V2	Collar AC - 060 - 063 - V2		
12	26 06	4	Rondella spaccata rinf. Ø 12	Reinforced split washer Ø12		
13	17 89	4	Vite TE int.fil.UNI 5739	Threaded screw UNI 5739 M12x30		
14	22 07	9	Rondella zigrinata Ø 8	Knurled washer Ø 8		
15	29 38	9	Rondella zigrinata Ø 10	Knurled washer Ø 10		
16	35 33	9	Vite TCEI UNI5931 M8X35	Screw TCEI UNI5931 M8X35		
17	25 48	9	Vite TCEI UNI5931 M10X50	Screw TCEI UNI59231 M10X50		
18	21 63	2	Rondella 15.2X27X2.7 FIAT	Washer 15.2x27x2.7 FIAT galvanized		
19	26 25	2	Vite TEUNI 5739 M14X35-8.8	Threaded screw UNI 5739 M14x35 8.8		

RT 1000

ROC

61_60_M

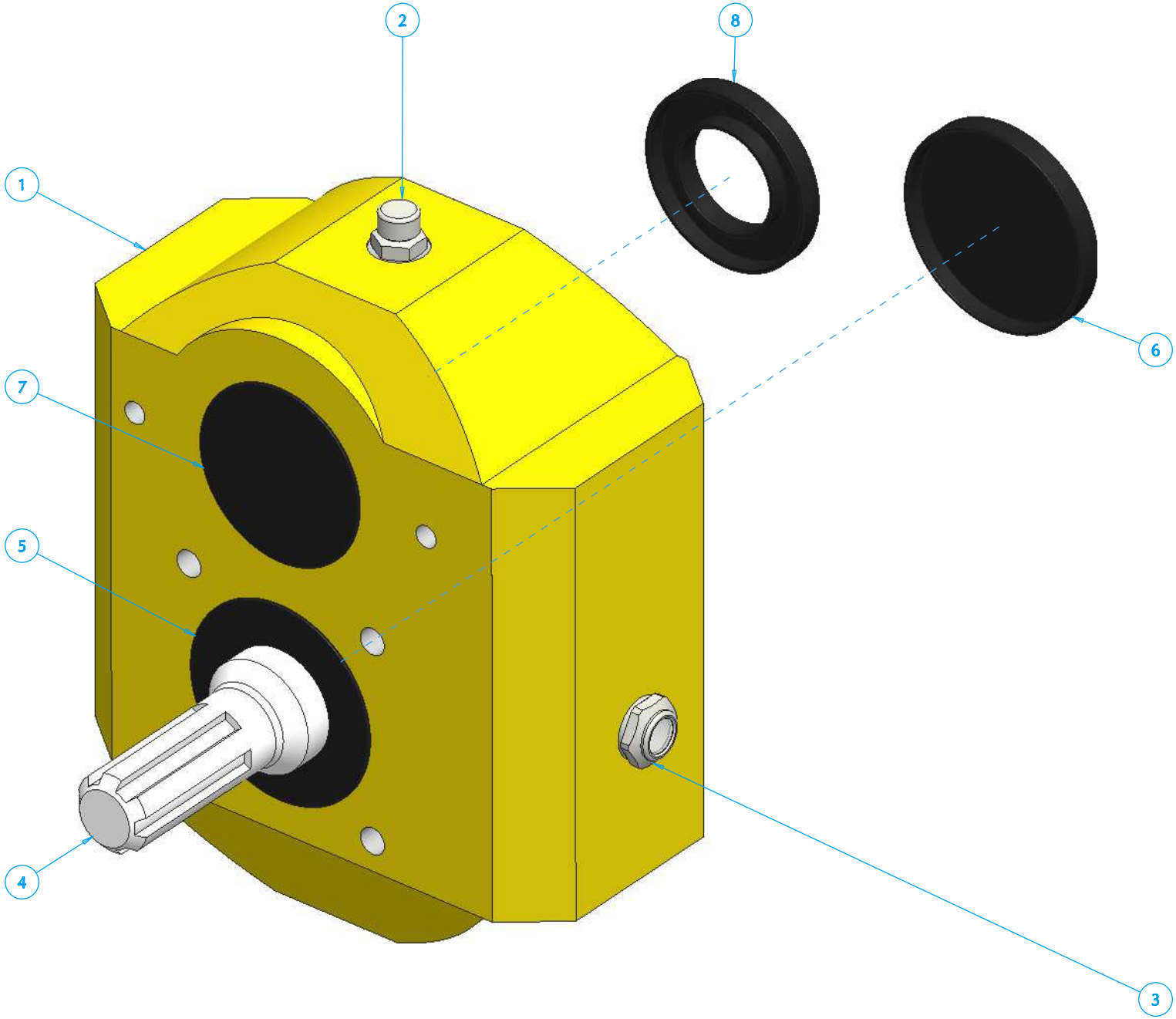

RT 1000

ROC

61_60_M

Ref	Code	Qt	*Descrizione*	*Description*	*Designation*	*Beschreibung*
1	61 60	1	Moltiplicatore per 540 giri	Gear box M7 540 rpm		
2	06 38	1	Tappo sfiato da 3/8	Gear box vent. valve 3/8		
3	33 74	1	Tappo spia olio 1/2 gas	Cap oil light 1/2 gas		
4	68 94	1	Albero per moltiplicatore	Shaft for pump multipl		
5	05 99	1	Paraolio 50X90X10	Oil retailer 50x90x10		
6	35 25	1	Paraolio chiuso 90X10	Oil retailer 90x10		
7	35 24	1	Paraolio chiuso 80X10	Oil retailer 80x10		
8	21 50	1	Paraolio 45X80X10	Oil retailer 45x80x10		

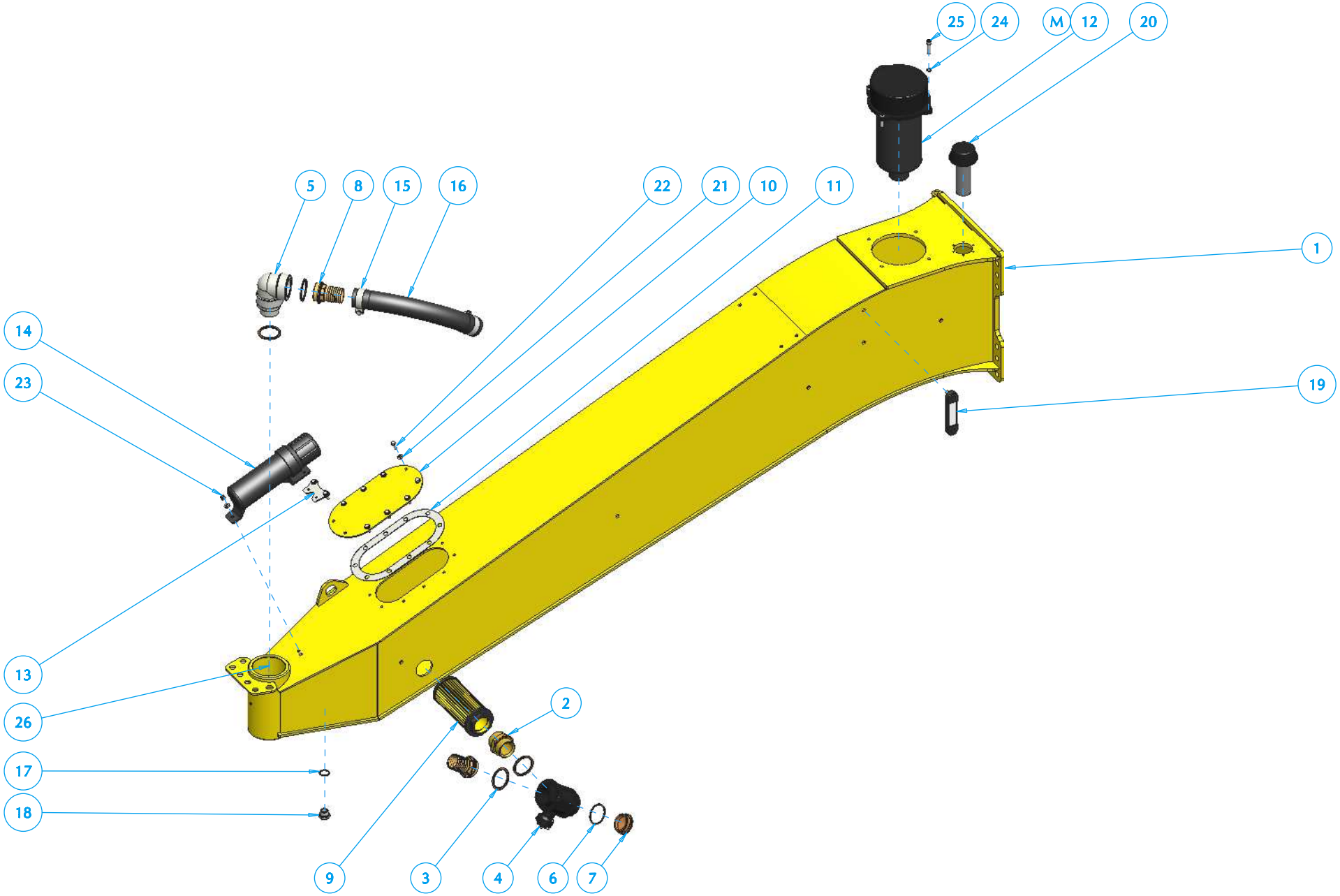
25
24
M
12
20
5
8
15
16
22
21
10
11
1
14
23
19
13
26
2
17
18
9
3
4
6
7

RT 1000

ROC

R16200-0000-M5

Ref	Code	Qt	Descrizione	Description	Designation	Beschreibung
1	66 05	1	Timone principale	Main drawbar RT1220		
2	31 45	1	Niples 2"gas	Nipples 2" gas		
3	31 46	4	Bonder 2" gas	Washer bonded 2" gas		
4	64 11	1	Rubinetto a T 2"	Locking T 2" faucet		
5	60 28	1	Giunto girevole 2"gas	Turning joint		
6	31 49	1	Rondella di rame 2" gas	Copper washer 2" gas		
7	64 09	1	Tappo 2" in ottone	Brass cap 2"		
8	32 90	2	Portatubo 2" gas per tubo	2" Brass holder Ø 50		
9	61 04	1	Filtro aspirazione	Suction filter		
10	60 85	1	Tappo ispezione serbatoio	Inspection tank cap		
11	64 22	1	Distanziale per coperchio serb.	Cover for ACAM bearing		
12	61 05	1	Filtro di ritorno completo RT	Completed return filter RT		
13	68 53	1	Piastrino supp. portadocumenti	Plate holder for doc. tube		
14	35 70	1	Tubo portadocumenti	Documents tube		
15	05 22	2	Collare AC-060-063 V2	Clamp AC-060-063 V2		
16	T0 68	1	Tubo aspiraz. Da Mat. 64	Suction hose Mat 64		
17	32 43	1	Rondella di alluminio 3/4 gas	Aluminum washer 3/4 gas		
18	19 20	1	Tappo 3/4 gas	Cap 3/4 gas		
19	63 63	1	Segnalatore di livello olio	Oil level signal device		
20	62 31	1	Tappo filtro sfiato aria	Pressure-release filt. cap		
21	31 37	11	Rondella piana 8.5x18x2	Flat washer 8.5x18x2		
22	23 23	11	Vite TE int.fil.UNI 5739 M8X25	TE screw UNI 5739 M8X25		
23	30 21	1	Dado esag. alto UNI 5587 M8	Zinc coated nut UNI 5587 M8		
24	29 38	4	Rondella zigrinata Ø 10	Galvanized washer Ø 10		
25	25 14	4	Vite TCEI UNI5931 M10X40	Screw TCEI UNI5931 M10X40		
26	62 02	1	Kit guarnizioni per 60 38	Seal kit 60 38		

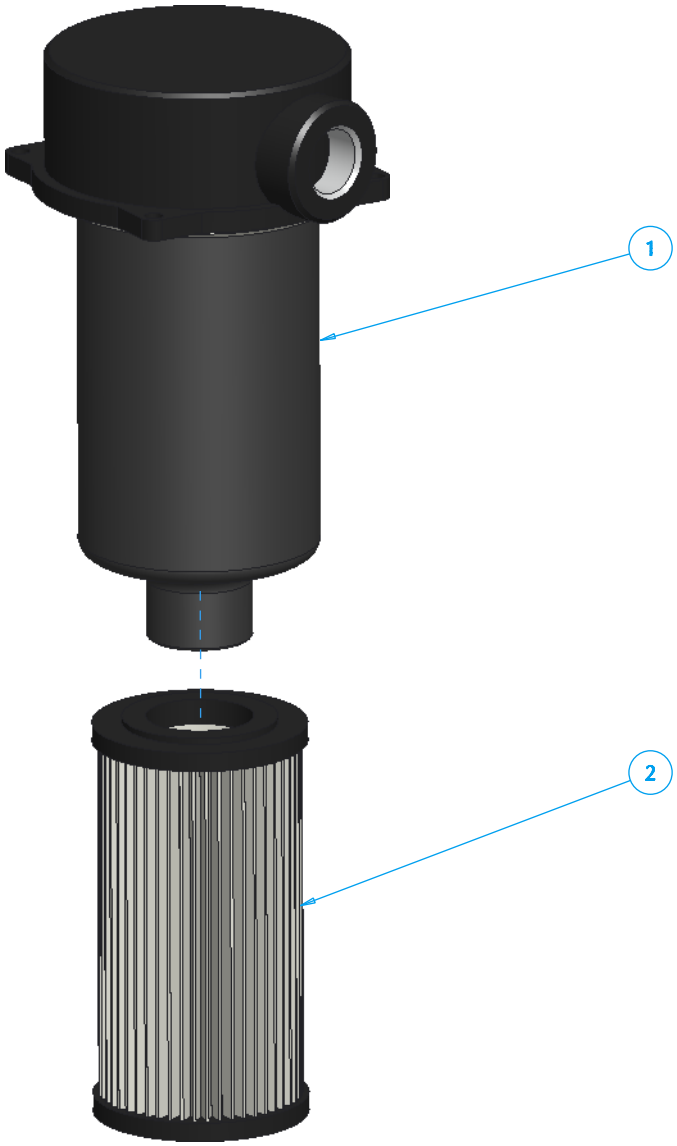
1
2

RT 1000

ROC

61_05_M

Ref	Code	Qt	*Descrizione*	*Description*	*Designation*	*Beschreibung*
1	61 05	1	Filtro di ritorno completo RT	Complete spring back filter RT		
2	61 06	1	Filtro cartuccia per RT	Cartridge filter for RT		

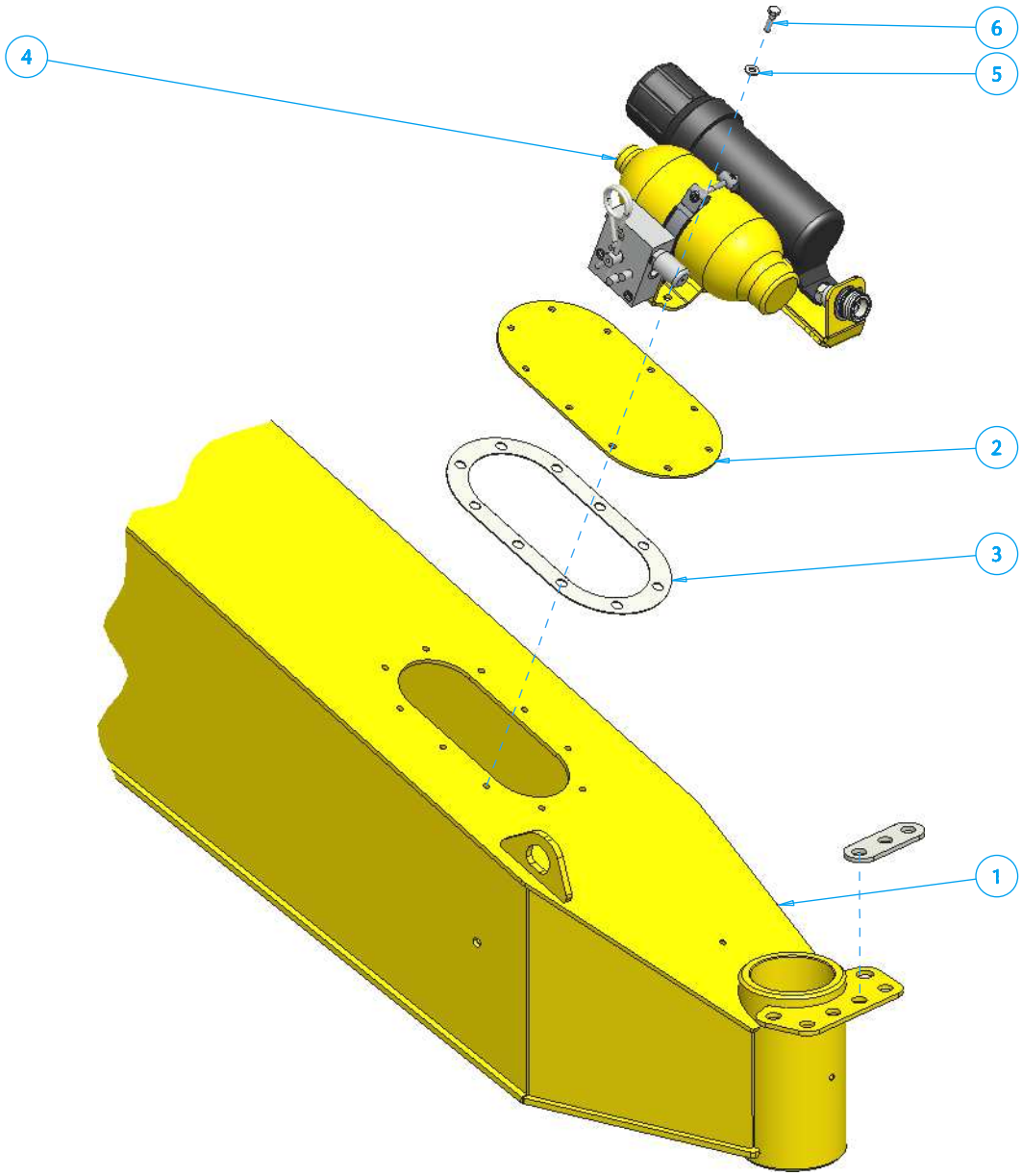
4
6
5
2
3
1

RT 1000 R16200-0000-M6

Ref	Code	Qt	*Descrizione*	*Description*	*Designation*	*Beschreibung*
1	66 05	1	Timone principale RT 1220	Main drawbar RT1220		
2	60 85	1	Tappo ispezione serbatoio	Inspection tank cap		
3	64 22	1	Distanziale per coperchio serb.	Cover for ACAM bearing		
4	69 34	1	Kit frenatura idrau. di emerg	Hydr. braking emergency kit		
5	31 37	4	Rondella piana 8.5x18x2	Flat washer 8.5x18x2		
6	31 06	4	Vite TE parz.fil.UNI5737 M8X30	Screw TE UNI5737 M8X30		
7	64 55	1	Piastrino supporto tubi aria	Supp. plates for air tubes		

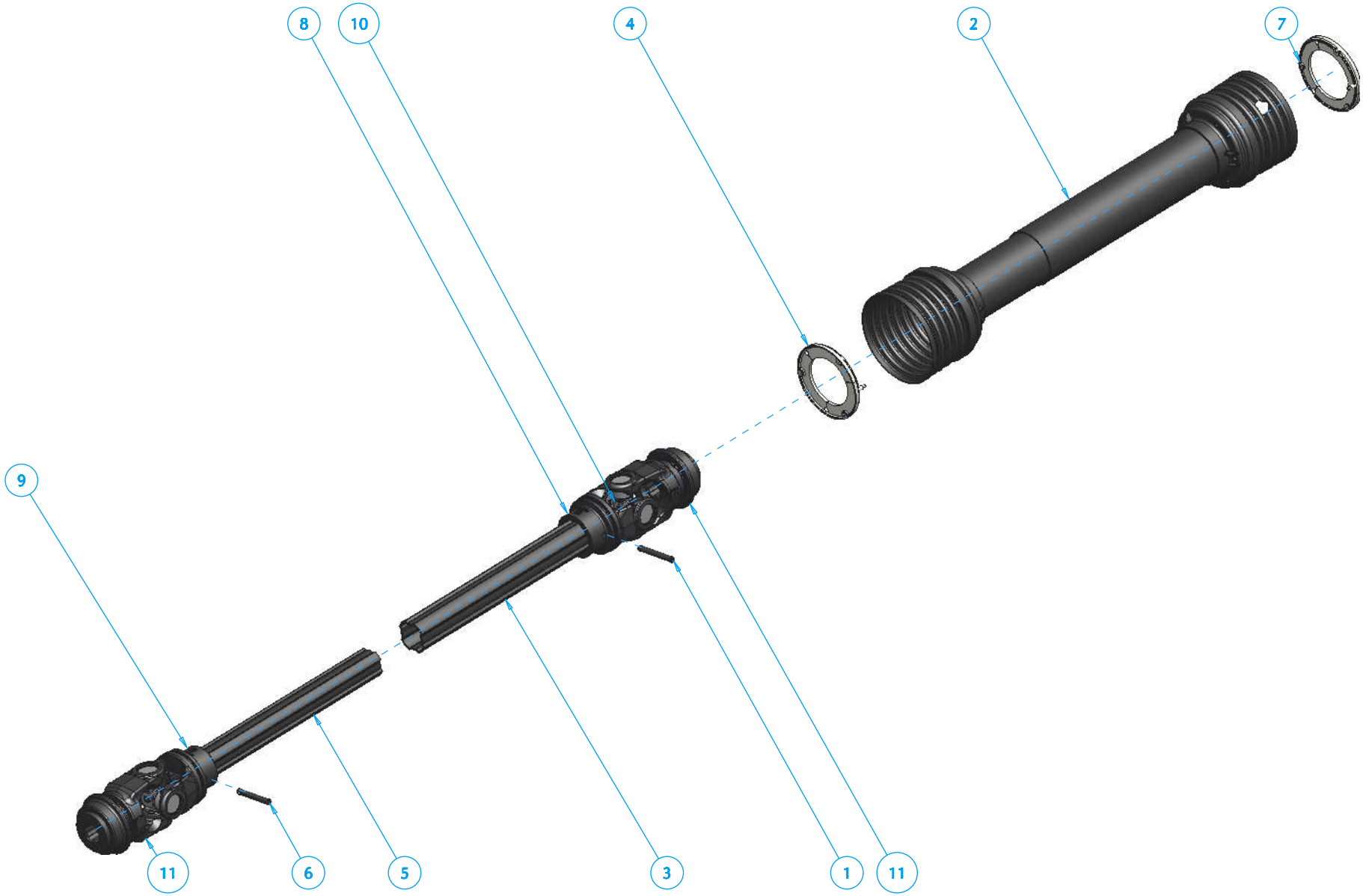
8
10
4
2
7
9
11
6
5
3
1
11

RT 1000

ROC

60_42_M

Ref	Code	Qt	*Descrizione*	*Description*	*Designation*	*Beschreibung*
1	64 60	1	Spina elastica	Elastic plug		
2	64 68	1	Protezione completa	Complete protection		
3	64 61	1	Tubo cardanico esterno	External gimbal tube		
4	64 67	1	Ghiera	Ring nut		
5	64 62	1	Tubo cardanico interno	Internal gimbal tube		
6	64 63	1	Spina elestica	Elastic spine		
7	64 66	1	Ghiera	Ring nut		
8	64 59	1	Forcella	Yoke		
9	64 64	1	Forcella	Yoke		
10	64 58	2	Crociera	Joint		
11	64 65	2	Forcella 1″ 3/8 Z6	Yoke 1″ 3/8 Z6		

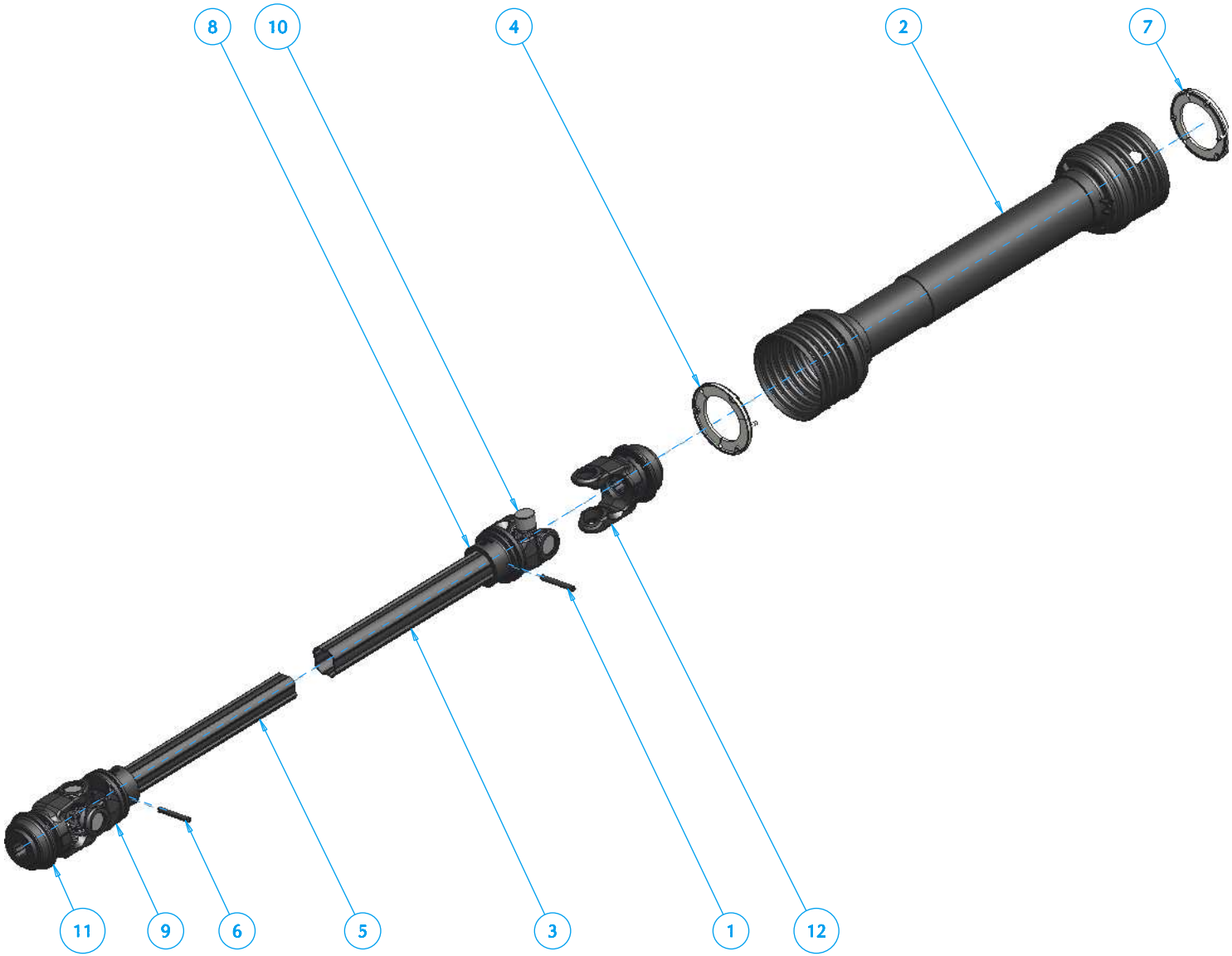
8
10
4
2
7
11
9
6
5
3
1
12

RT 1000 60 41 M

Ref	Code	Qt	*Descrizione*	*Description*	*Designation*	*Beschreibung*
1	64 60	1	Spina elastica	Elastic plug		
2	64 68	1	Protezione completa	Complete protection		
3	64 61	1	Tubo cardanico esterno	External gimbal tube		
4	64 67	1	Ghiera	Ring nut		
5	64 62	1	Tubo cardanico interno	Internal gimbal tube		
6	64 63	1	Spina elestica	Elastic spine		
7	64 66	1	Ghiera	Ring nut		
8	64 59	1	Forcella	Yoke		
9	64 64	1	Forcella	Yoke		
10	64 58	2	Crociera	Joint		
11	64 65	1	Forcella 1" 3/8 Z6	Yoke 1" 3/8 Z6		
12	64 57	1	Forcella 1" 3/8 Z21	Yoke 1" 3/8 Z21		

ROC

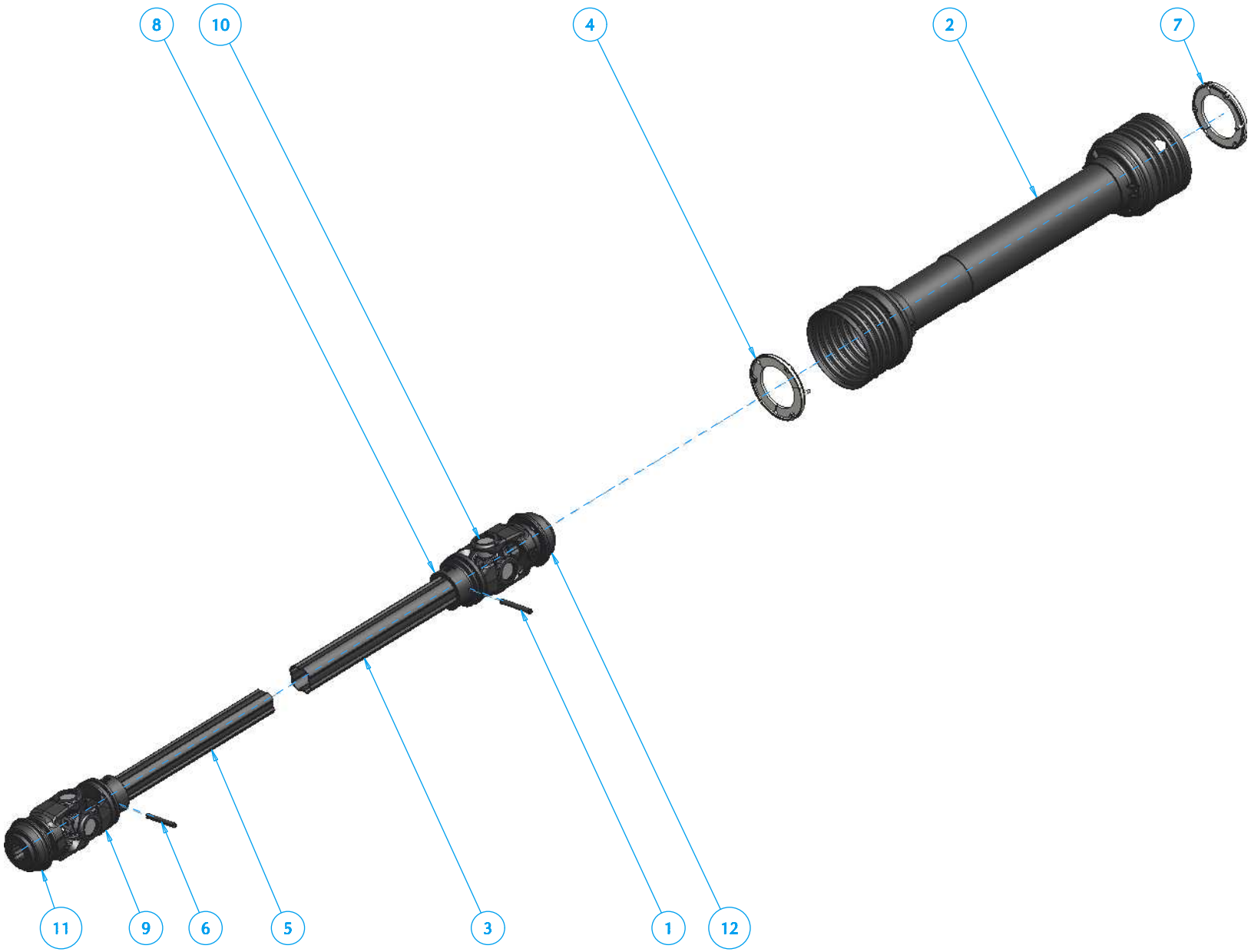
8
10
4
2
7
11
9
6
5
3
1
12

RT 1000 62_80_M

Ref	Code	Qt	*Descrizione*	*Description*	*Designation*	*Beschreibung*
1	64 60	1	Spina elastica	Elastic plug		
2	64 68	1	Protezione completa	Complete protection		
3	64 61	1	Tubo cardanico esterno	External gimbal tube		
4	64 67	1	Ghiera	Ring nut		
5	64 62	1	Tubo cardanico interno	Internal gimbal tube		
6	64 63	1	Spina elestica	Elastic spine		
7	64 66	1	Ghiera	Ring nut		
8	64 59	1	Forcella	Yoke		
9	64 64	1	Forcella	Yoke		
10	64 58	2	Crociera	Joint		
11	64 65	1	Forcella 1″ 3/8 Z6	Yoke 1″ 3/8 Z6		
12	62 76	1	Forcella 1″ 3/8 Z20	Yoke 1″ 3/8 Z20		

RT 1000

ROC

R23200-0000-M

A-2

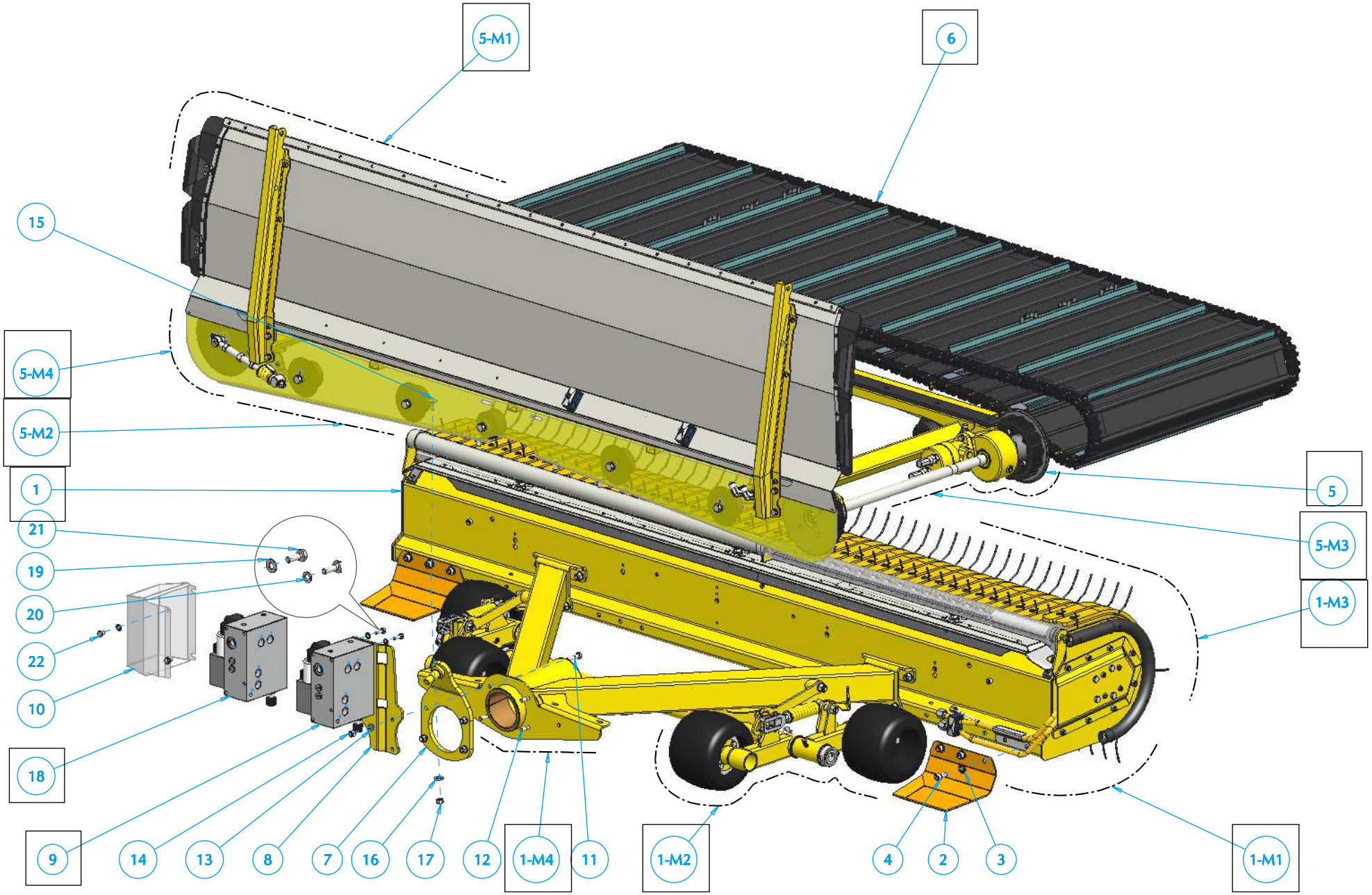

C-1

RT 1000

ROC

R23200-0000-M

Ref	Code	Qt	Descrizione	Description	Designation	Beschreibung
1	R13101-0000	1	Vedi pag. C-3	See page C-3		
2	60 64	2	Slitta/scarpetta	Skid		
3	30 43	6	Rondella Contact 14.4x30x2.4	Contact washer 14.4x30x2.4		
4	26 24	6	Vite TCEI UNI5931 M14X30	Screw TCEI UNI 5931 M14X30		
5	R13102-0000	1	Vedi pag. C-41	See page C-41		
6	67 67	1	Nastro lungo 3 manine *C-57	Long belt 3 teeth *C-57		
7	60 58	1	Supporto bilanc. centrale	Central bal. support		
8	66 07	1	Supporto blocco valvole SX	Support for valve blockage		
9	64 89	1	Sist. contro rotaz. *F-65	Motor rotat. control *F-65		
10	67 70	1	Cofano copri valvole SX	Valve cover bonnet SX		
11	35 32	2	Vite TE UNI5738	Screw TE UNI5738		
12	30 07	2	Vite TE UNI5738-	Screw TE UNI5738		
13	24 62	4	Rosetta UNI 6592 13X24	Washer UNI 6592 13x24		
14	28 65	4	Dado autobb. alto 12 x 1.25	Self-locking nut 12x1.25		
15	30 71	4	Vite quad. sotto testa12x30x8	Screw 12x30x8 square head		
16	30 70	4	Rondella piana 12.5x30x4	Washer 12.5x30x4		
17	02 90	4	Dado autobb. alto M12 7473	Self-locking nut M12 7473		
18	71 37	2	controllo rotaz. mot. *F-63	Engine rotat. control *F-63		
19	35 36	4	Rondella Contact 10.2x22x1.6	Contact washer 10.2x22x1.6		
20	03 13	2	Rondella spaccata rinf. Ø 10	Reinforced washer Ø 10		
21	26 82	4	Vite TE int.fil.UNI 5739 M10X	Screw TE UNI 5739 M10X30		
22	31 12	2	VITE TE INT.FIL.UNI 5739 M1	Screw TE UNI 57 39 M10X16		

RT 1000

ROC

R13101-0000-M1

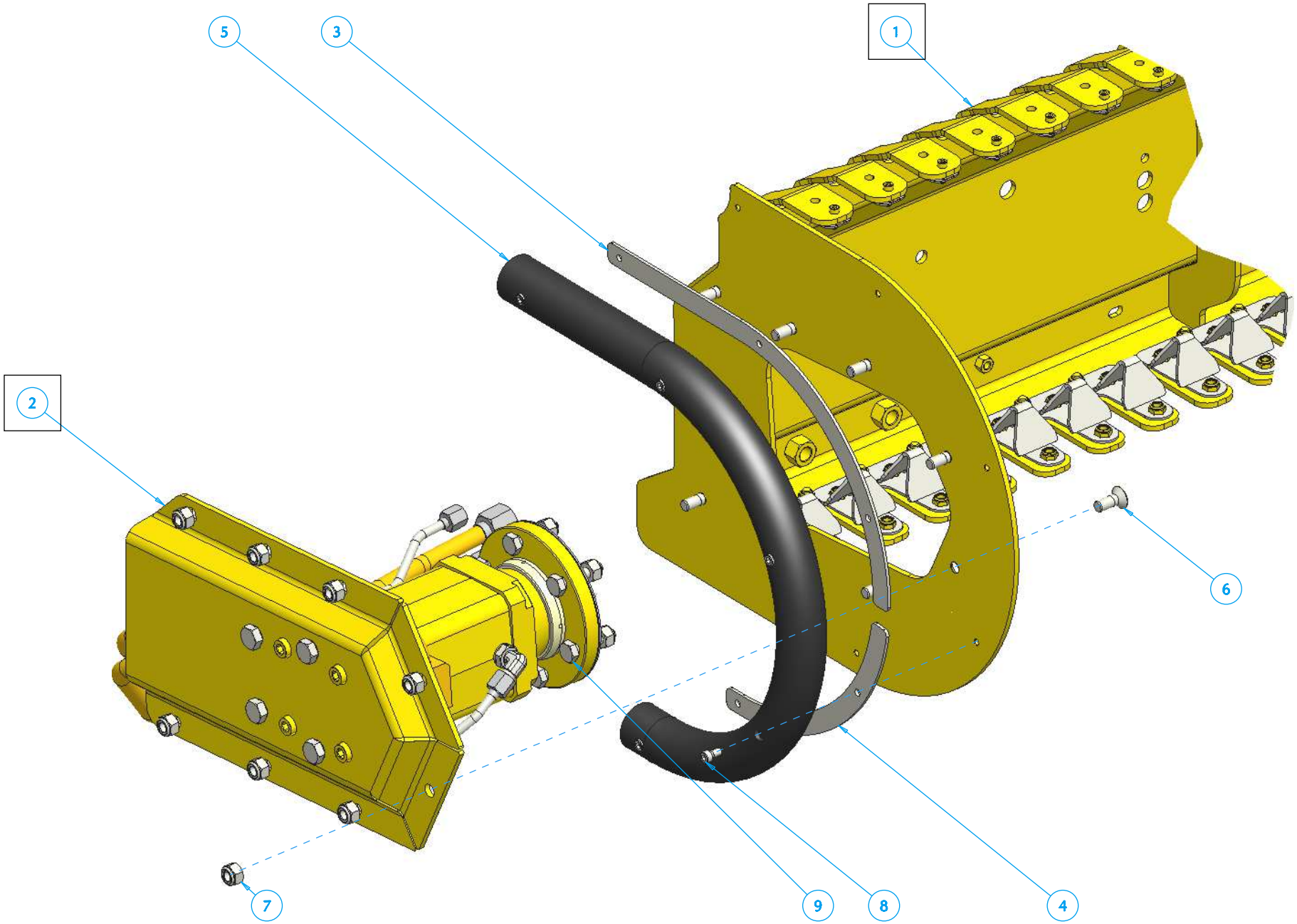

RT 1000

ROC

R13101-0000-M1

Ref	Code	Qt	*Descrizione*	*Description*	*Designation*	*Beschreibung*
1	R13101-0100	1	Vedi pag. C-11	See page C-11		
2	R13101-0500	1	Vedi pag. C-17	See page C-17		
3	64 33	1	Piastra sup.fermatubo pick-up	Clamp higher plate pickup		
4	64 32	1	Piastra inf.fermatubo pick-up	Clamp lower plate pickup		
5	62 98	1	Tubo protez. lat. pick-up	Lateral protection pickup		
6	30 04	8	Vite TSPEI UNI 5933 M10X25	Screw TSPEI UNI 5933 M10X25		
7	02 34	14	Dado autobb. alto M10 7473	Self-locking nut M10 7476		
8	30 51	5	Vite TCEI UNI5931 M6X12	Screw TCEI UNI5931 M6X12		
9	25 86	6	Vite TE parz.fil.UNI5737 M10X45	Screw TE UNI5737 M10X45		

RT 1000

ROC

R13101-0000-M2

C-1

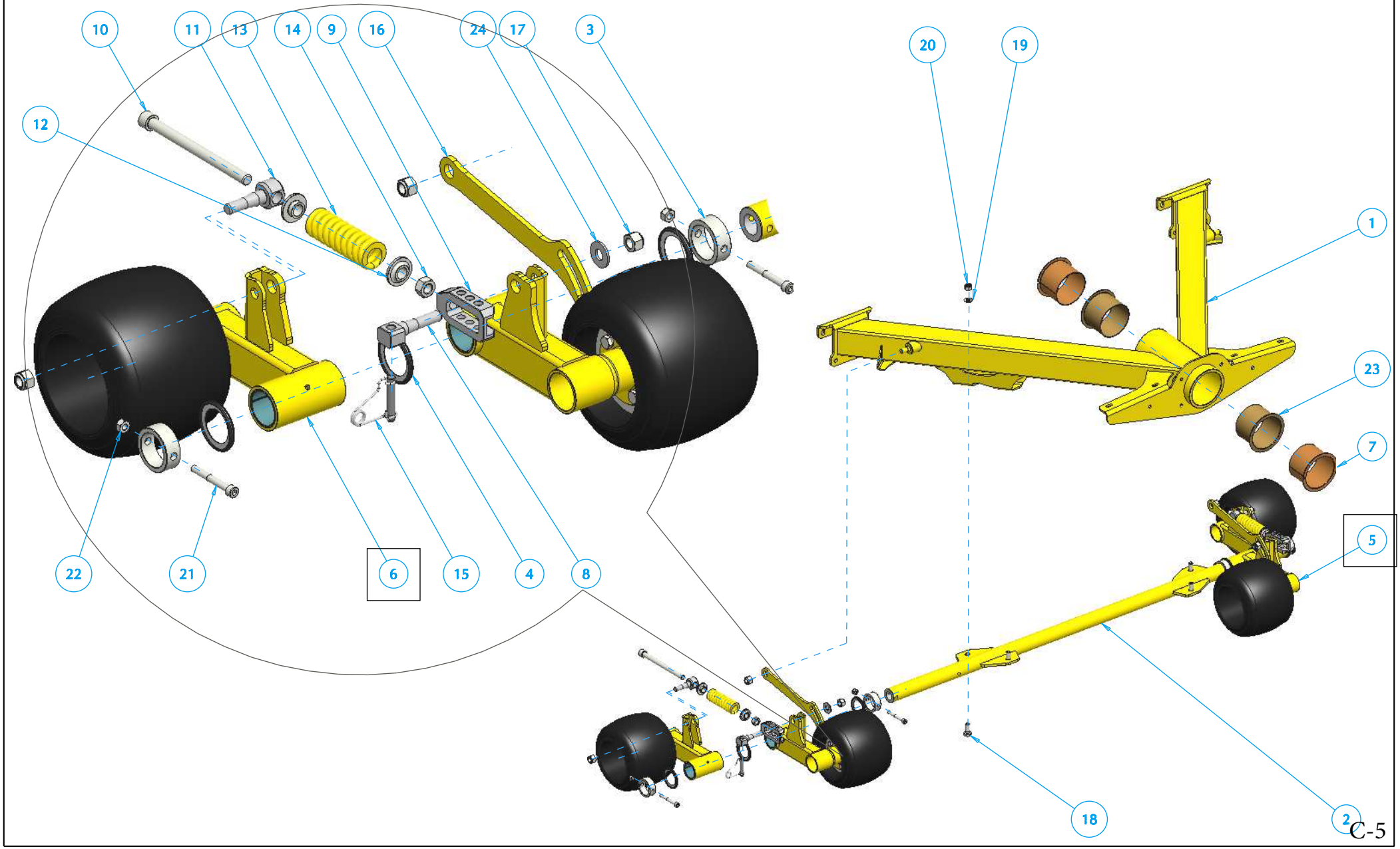

RT 1000

ROC

R13101-0000-M2

Ref	Code	Qt	*Descrizione*	*Description*	*Designation*	*Beschreibung*
1	61 69	1	Telaio triang.porta-pickup lat	Side triangular frame pick-up		
2	61 81	1	Assale ruotine laterale lungo	Long-side axle for sm.wheels		
3	60 15	4	Anello di fissaggio	Ring for sm.wheels		
4	61 90	6	Anello di rasamento	Ring for sm.wheels		
5	R13101-1400	2	Vedi pag. C-31	See page C-31		
6	R13101-1500	2	Vedi pag. C-33	See page C-33		
7	61 98	2	Boccola 120x125-145x90 Bronz	Bushing 120x125-145x90		
8	66 34	2	Perno registrabile	Pin for registrable tandem		
9	66 35	2	Terminale registro tandem	Terminal for reg. tandem		
10	35 04	2	Vite a brugola M16x210 Zinc.	Allen screw m16x201		
11	66 33	2	Perno forato x tandem	Hole pin for tandem		
12	60 55	4	Boccola sagomata in acciaio	Washer for spring support		
13	60 66	2	Molla per sospensione pick-up	Susp.spring for pick-up		
14	28 60	2	Dado esag. norm. UNI 5588 M	Galv. nut UNI 5588 M		
15	66 36	2	Coppiglia speciale per tandem	PSlint for tandem		
16	61 70	2	Biella finecorsa ruotine	Connecting rod for sm.wheels		
17	01 80	6	Dado autobb. alto M16 7473	High self-locking nut M16		
18	26 25	4	Vite TE int.fil.UNI 5739 M14X	Screw TE UNI 5739 M14		
19	30 47	4	Rondella piana 14.5x28x3	Washer 14.5x28x3		
20	20 48	4	Dado autobb. alto M14 7473	Self-locking nut M14 7473		
21	34 28	4	Vite TCEI UNI5931 M10X80	Screw TCEI UNI5931 M10x80		
22	02 34	4	Dado autobb. alto M10 7473	Self-locking nut M10 7473		
23	69 40	2	Boccola 120x125-145x90 Plasti	Bushing 120x125-145x90		
24	36 96	1	Rondella 16x38x3 temperata	Tempered washer		

RT 1000

ROC

R13101-0000-M3

C-1

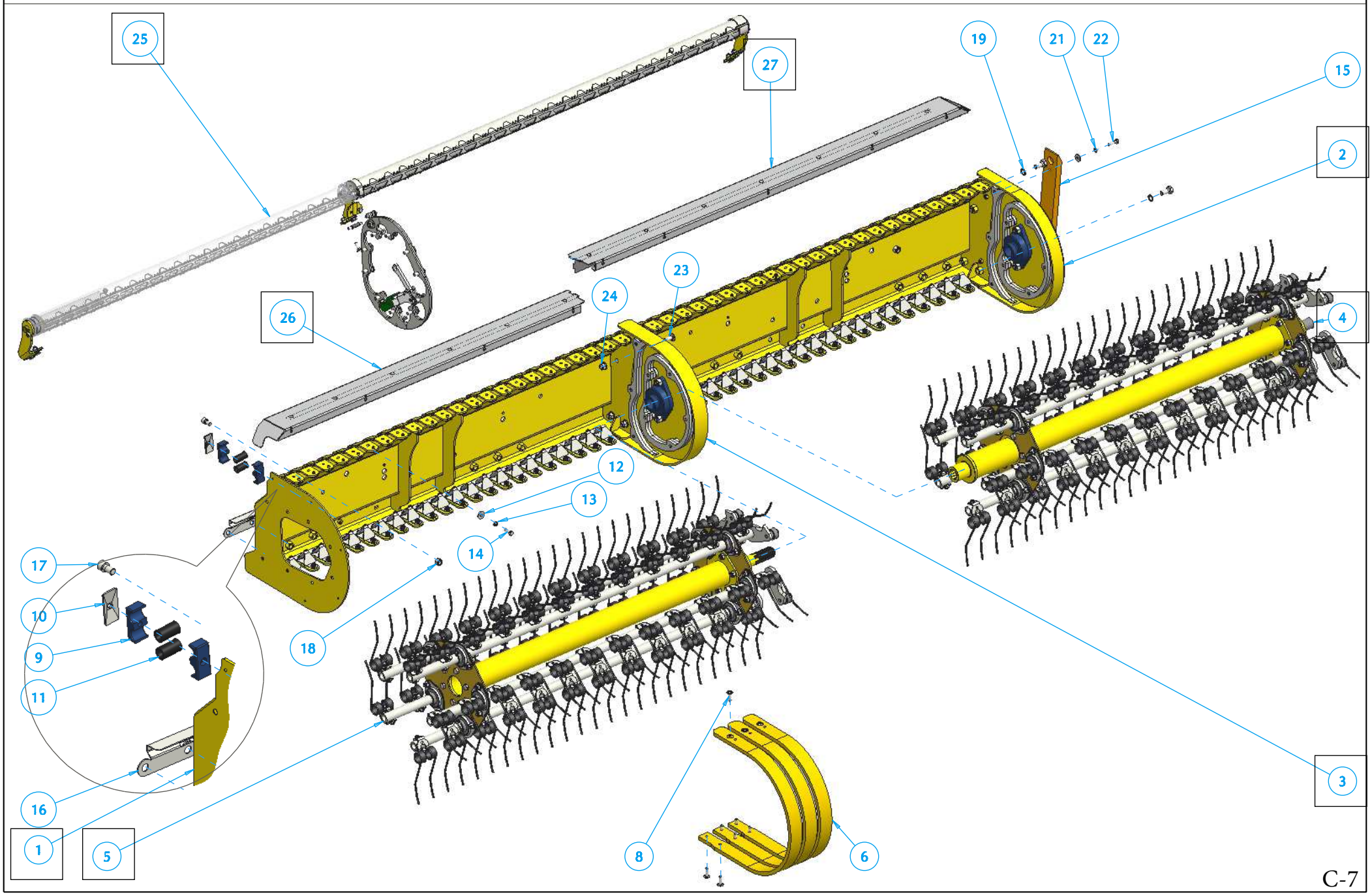

C-7

RT 1000

ROC

R13101-0000-M3

Ref	Code	Qt	Descrizione	Description	Designation	Beschreibung
1	R13101-0100	1	Vedi pag. C-11	See page C-11		
2	R13101-0200	1	Vedi pag. C-13	See page C-13		
3	R13101-0300	1	Vedi pag. C-15	See page C-15		
4	R13101-060B	1	Vedi pag. C-19	See page C-19		
5	R13101-070B	1	Vedi pag. C-23	See page C-23		
6	61 31	47	Fascia RT gialla 1054x46x12	RT yellow strip 1054x46x12		
7	70 27	1	Fascia RT g. con asola	RT yellow strip with bow		
8	29 93	139	Vite .8x29 ROC	screw 8x29 ROC		
9	32 10	2	Fermatubo doppio Ø 22	Double tube-blocking Ø 22		
10	32 06	1	Piastra x ferma tubo CF3	Plate for tube-blocking CF3		
11	32 33	2	Anello in gomma	Rubber ring		
12	31 15	6	Rondella piana 8.5x24x3	Washer 8.5x14x3		
13	23 20	4	Rondella spaccata rinf. Ø 8	Split reinforced washer Ø 8		
14	23 23	4	Vite TE int.fil.UNI 5739	Screw TE int. fil. UNI 5739		
15	61 07	1	Protezione laterale pickup	Side shield for pick-up		
16	62 06	1	Piastra ferma-tubo inox	Stainless tube-locking plate		
17	29 78	2	Vite TCEI UNI5931 M12X20	Screw TCEI UNI5931 M12X20		
18	02 90	2	Dado autobb. alto M12	Self-locking nut M12 7473		
19	30 37	4	Rondella zigrinata Ø 14	Galvanized washer Ø 14		
20	19 62	4	Vite TE int.fil.UNI 5739	Screw TE int. fil. UNI 5739		
21	22 07	2	Rondella zigrinata Ø 8	Galvanized washer Ø 8		
22	31 06	2	Vite TE parz.fil.UNI5737	Screw TE int. fil. UNI 5737		
23	07 71	4	Vite 12x30x4	Square head screw 12x30x4		
24	25 24	4	Dado autobb. flangiato 12	Flanged self-locking nut 12		
25	70 30	1	Kit rullini pulitori *F-99	Roller clean. kit *F-99		
26	71 17	1	Spondina front compl DX *C-35	Compl. RIGHT fr. bumper*C-35		
27	71 20	1	Spondina front compl SX *C-37	Compl. LEFT fr. bumper *C-37		

RT 1000

ROC

R13101-0000-M4

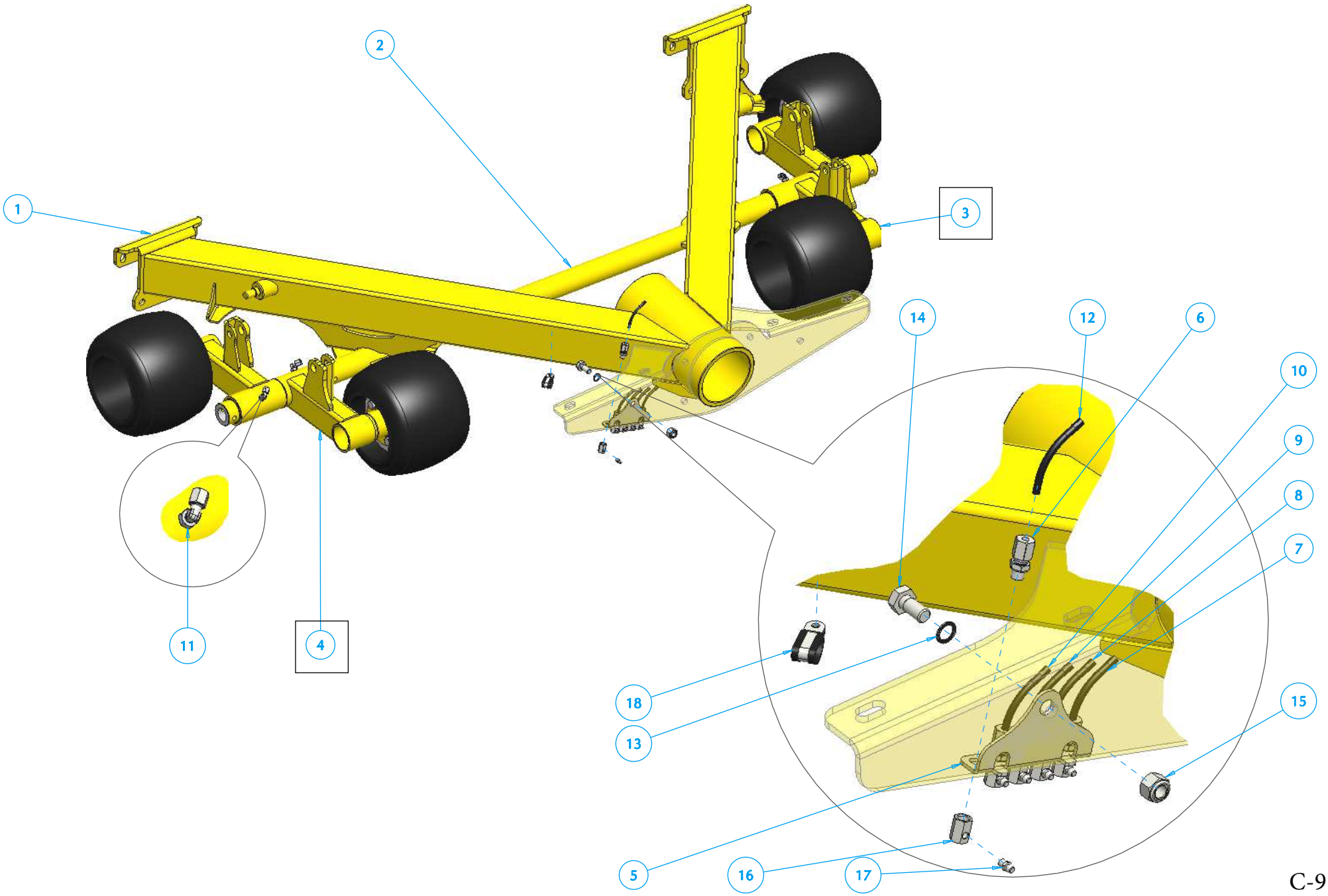

RT 1000

ROC

R13101-0000-M4

Ref	Code	Qt	Descrizione	Description	Designation	Beschreibung
1	61 69	1	Telaio triang.porta-pickup lat	Tr.frame for side pickup		
2	61 81	1	Assale ruotine latlungo	Long-side axle sm.wheels		
3	R13101-1400	2	Vedi pag. C-31	See page C-31		
4	R13101-1500	2	Vedi pag. C-33	See page C-33		
5	61 84	1	Piastrino porta ingr lat	Side greas.-holder plate		
6	62 10	5	Racc igrass. passapare	Greasing joint		
7	63 04	1	Tubo x ingras.	Greasing tube Ø 6 cm 140		
8	63 05	1	Tubo x ingras.	Greasing tube Ø 6 cm 127		
9	63 06	1	Tubo x ingras.	Greasing tube Ø 6 cm 39		
10	63 07	1	Tubo x ingras.	Greasing tube Ø 6 cm 125		
11	62 09	5	Raccordo a 90°	Joint 90°		
12	63 08	1	Tubo x ingras.	Greasing tube Ø 6 cm 133.5		
13	21 85	1	Rondella zigr Ø 12	Galvanized washer Ø 12		
14	26 09	1	Vite TE UNI 5739 M12X25	Screw TE UNI 5739 M12x25		
15	02 90	1	Dado autobb. M12 7473	Self-locking nut M12 74 73		
16	64 21	5	Racordo 90°ingrassatore	Fem. greasing fitting 90°		
17	31 24	5	Ingrassatore M 6 dritto	Str.greasing fitting M 6		
18	62 11	6	Graffetta Gommata Ø 15	Tube-lock clip Ø 15		

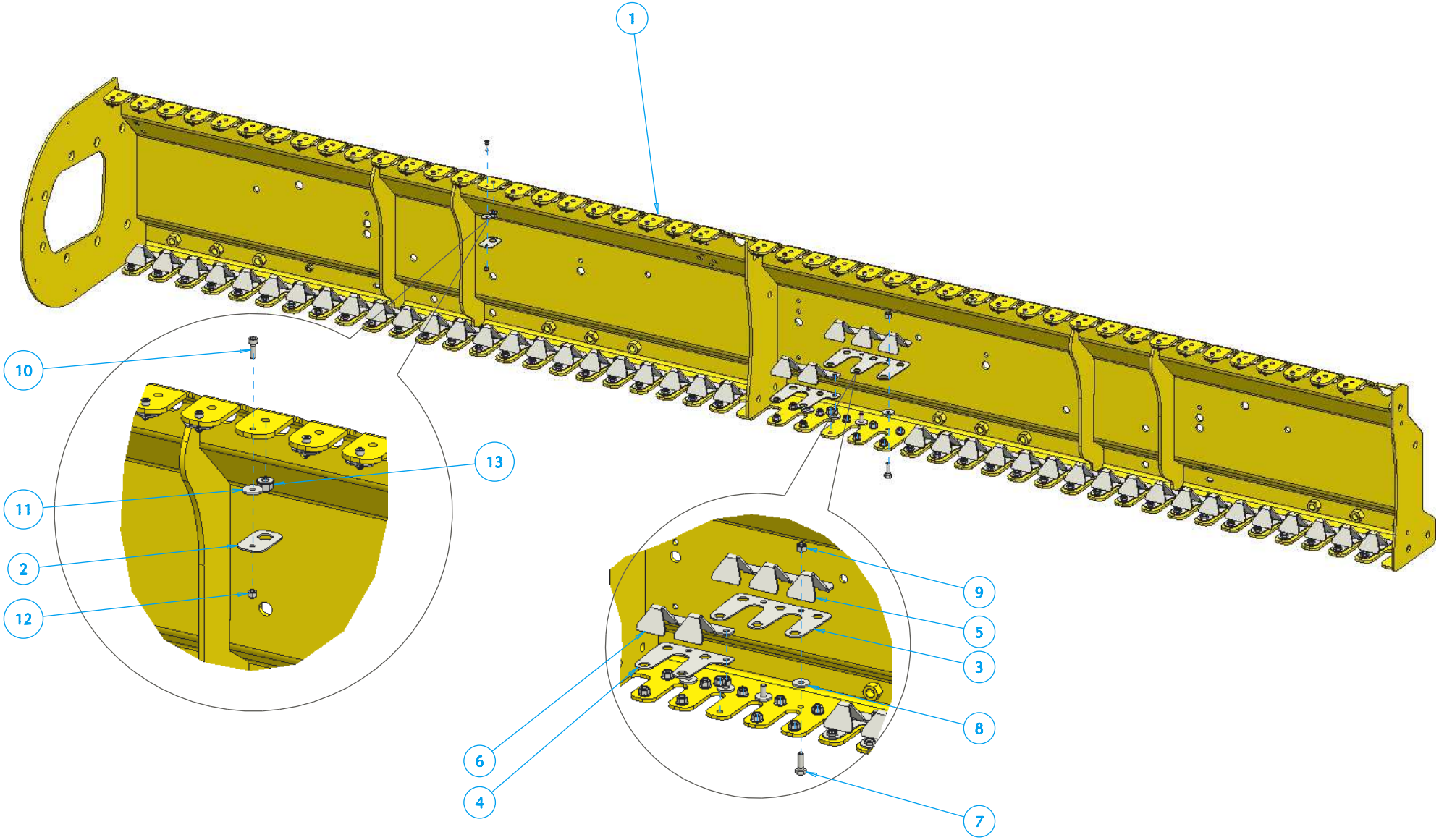
1
10
13
11
2
12
9
5
3
8
6
4
7

RT 1000

ROC

R13101-0100-M

Ref	Code	Qt	Descrizione	Description	Designation	Beschreibung
1	60 67	1	Telaio raccoglitore lungo	Long pick-up frame		
2	62 05	46	Piastra ferma dado sup	Upper nut locking plate		
3	62 04	14	Tubo ingr. Ø6 l. 140 cm lat	Greasing tube Ø 6 140cm		
4	62 03	2	Piastra ferma dado	Lower nut locking plate		
5	63 02	14	Piastrino guida molla largo	Large spring tine plate		
6	63 03	2	Piastrino guida molla stretto	Narrow spring tine plate		
7	23 23	32	Vite TE int.fil.UNI 5739 M8X25	TE screw UNI 5739 M8X25		
8	31 15	32	Rondella piana 8.5x24x3	Washer 8.5x14x3 7473		
9	29 30	32	Dado autobb. alto M 8 7473	Self-locking nut M6 6926		
10	25 05	46	Vite TCEI UNI5931 M5X16	Screw TCEI UNI5931 M5x16		
11	29 94	46	Rondella piana 5.5x20x2	Washer 5.5x20x2		
12	21 86	46	Dado autobb. alto M 5 7473	Self-locking nut M 5 7473		
13	16 98	138	Dado autobb. flangiato 8 6926	Fl.self-locking nut 8 6926		

RT 1000

ROC

R13101-0200-M

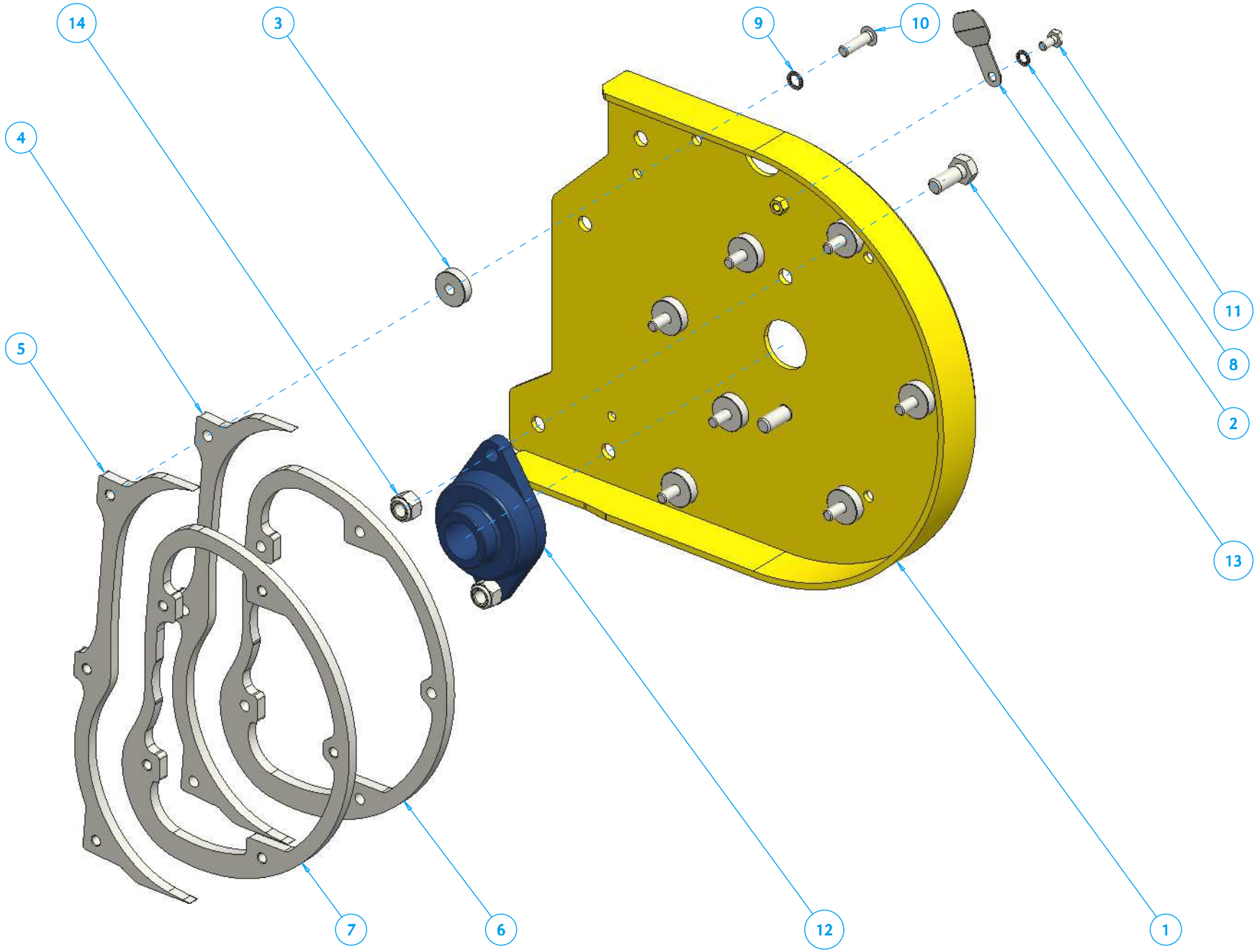

RT 1000

ROC

R13101-0200-M

Ref	Code	Qt	Descrizione	Description	Designation	Beschreibung
1	60 62	1	Porta acam esterno	External acam order		
2	63 98	1	Coperchio cuscinetto acam	Cover for acam bearing		
3	64 80	8	Distanziale per acam	Spacer for acam		
4	60 08	1	Pista acam forata est	Perf. external acam track		
5	60 09	1	Pista acam filattata est	Thr. external acam track		
6	60 06	1	Pista acam forata int	Perf. internal acam track		
7	60 07	1	Pista acam filett. int	Thr. external acam track		
8	22 07	1	Rondella zigrinata Ø 8	Knurled washer Ø 8		
9	29 38	8	Rondella zigrinata Ø 10	Knurled washer Ø10		
10	30 05	8	Vite 10x35	Screw 10x35		
11	23 21	1	Vite TE int.fil.UNI 5739	Screw TE int. fil. UNI 5739		
12	61 77	1	SKF FYTB 35 WF	Pick-up shaft bearing		
13	26 25	2	Vite TE int.fil.UNI 5739	Threaded screw UNI 5739		
14	20 48	2	Dado autobb. alto M14	High self-locking nut M14		

NEW
PICK-UP 6 RODS

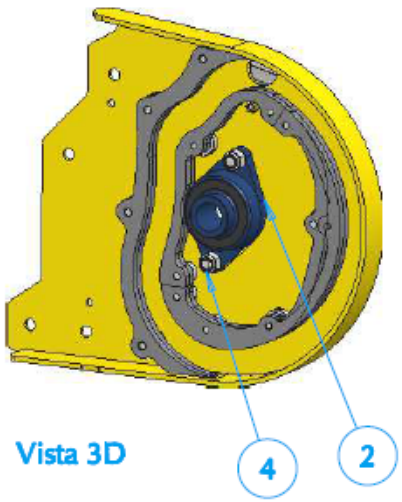

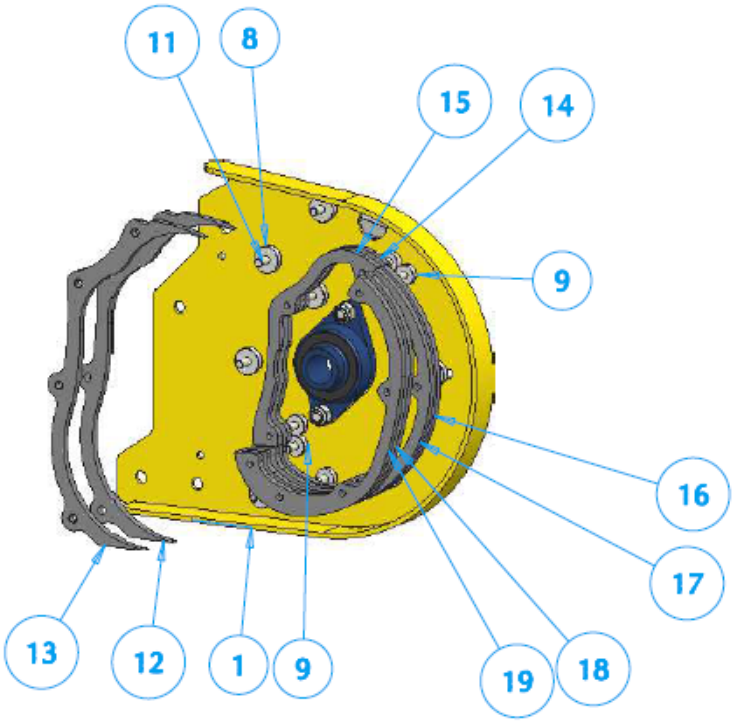

RT 1000

R13101-1700

Ref	Code	Qt	Descrizione	Description	Designation	Descripción
1	72 05	1	Porta acam esterno	-External ACAM holder	-	-
2	61 77	1	SKF FYTB 35 WF	-Pickup shaft bearing	-	-
3	26 25	2	Vite TE int.fil.UNI 5739 M14X35-8.8	-Screw TE UNI 5739 M8x16	-	-
4	20 48	2	Dado autobb. alto M14 7473	-Self-Locking nut M14 7473	-	-
5	63 98	1	Coperchio cuscinetto acam	-Cover for ACAM pad	-	-
6	22 07	1	Rondella zigrinata Ø 8	-Galvanized washer Ø8	-	-
7	23 21	1	Vite TE int.fil.UNI 5739 M8X16	-Screw TE UNI 5739 M8x16	-	-
8	64 80	7	Distanziale per acam Ø32	-ACAM spacer Ø24.5		
9	73 84	5	Distanziale per acam Ø24.5	-ACAM spacer Ø24.5		
10	29 38	12	Rondella zigrinata Ø 10	-Galvanized washer Ø10	-	-
11	30 05	12	Vite TBEI UNI ISO 7380 M10X35	-Screw TSBEI UNI 10x35	-	-
12	72 09	1	Pista acam forata esterna	-Thr. external ACAM track	-	-
13	72 10	1	Pista acam filett. esterna	-Thr. external ACAM track	-	-
14	73 85	1	Pista acam forata interna post.	-Thr. internal ACAM track rear	-	-
15	73 86	1	Pista acam filettata interna post.	-Thr. internal ACAM track rear	-	-
16	73 89	1	Pista acam forata interna anter. A	-Thr. internal ACAM track anterior A	-	-
17	73 90	1	Pista acam filettata interna anter.A	-Thr. internal ACAM track anterior A	-	-
18	73 87	1	Pista acam forata interna anter. B	-Thr. internal ACAM track anterior B	-	-
19	73 88	1	Pista acam filettata interna anter. B	-Thr. internal ACAM track anterior B	-	-

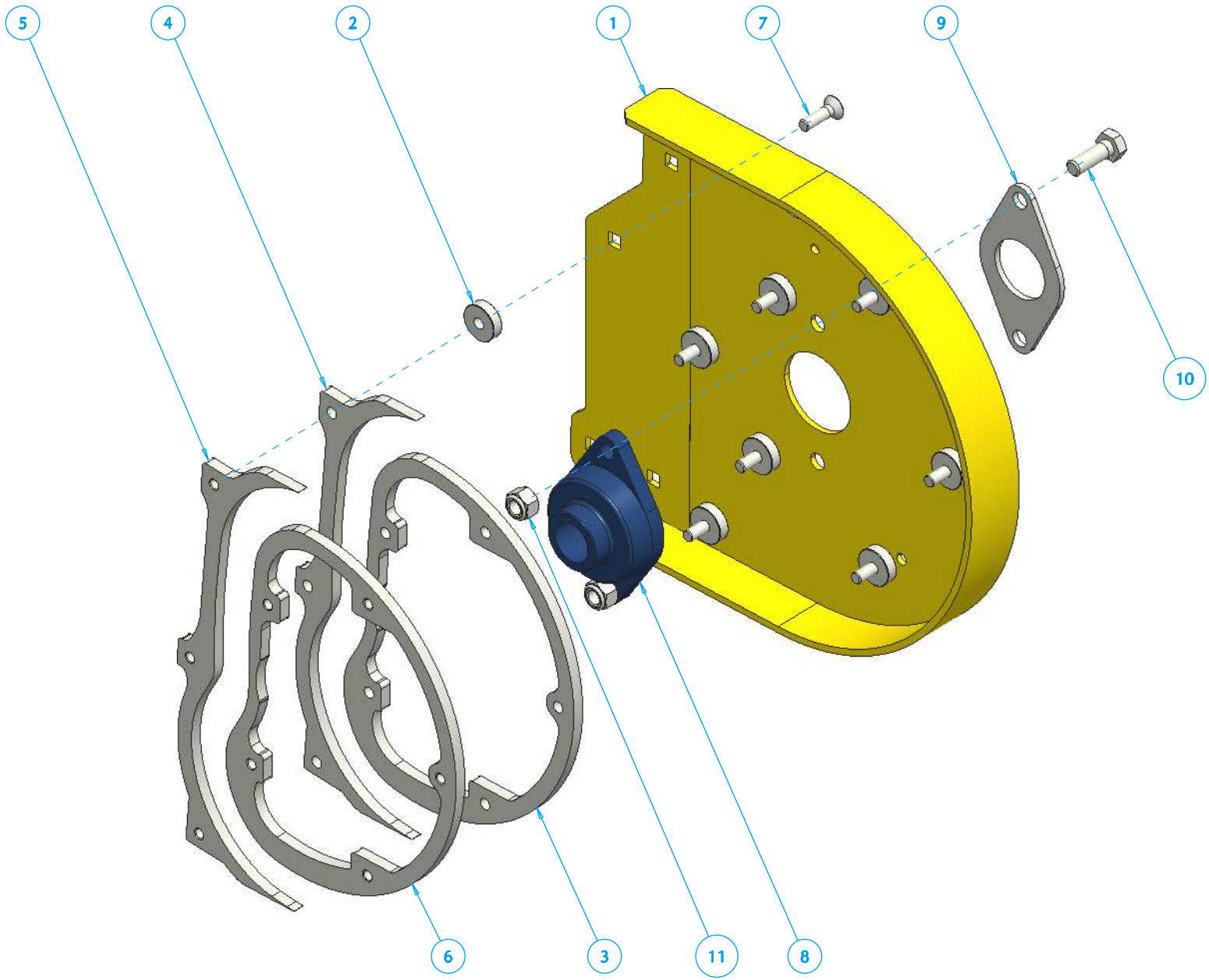
5
4
2
1
7
9
10
6
3
11
8

RT 1000

ROC

R13101-0300-M

Ref	Code	Qt	Descrizione	Description	Designation	Beschreibung
1	60 63	1	Porta acam interno	Internal acam order		
2	64 80	8	Distanziale per acam	Spacer for acam		
3	60 06	1	Pista acam forata int	Perf. internal acam track		
4	60 08	1	Pista acam forata est	Perf. external acam track		
5	60 09	1	Pista acam filattata est	Thr.external acam track		
6	60 07	1	Pista acam filett. int	Thr. external acam track		
7	29 92	8	Vite TSPEI UNI 5933	Screw TSPEI UNI 5933		
8	61 77	1	SKF FYTB 35 WF	Pick-up shaft bearing		
9	64 98	1	Piastra prot albero pick-up	Prot.plate for pick-up shaft		
10	26 26	2	Vite TE int.fil.UNI 5739	Screw TE int. fil. UNI 5739		
11	20 48	2	Dado autobb. alto M14	High self-locking nut M14		

NEW
PICK-UP 6 RODS

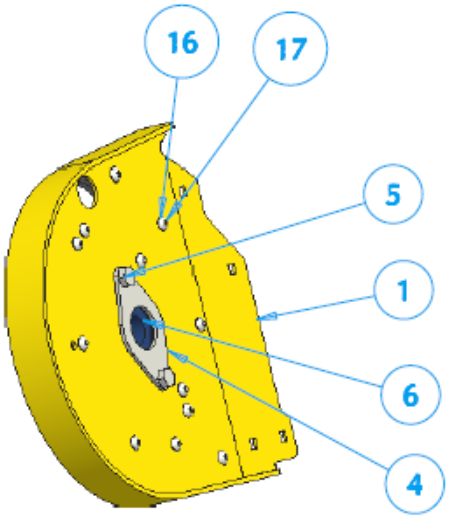

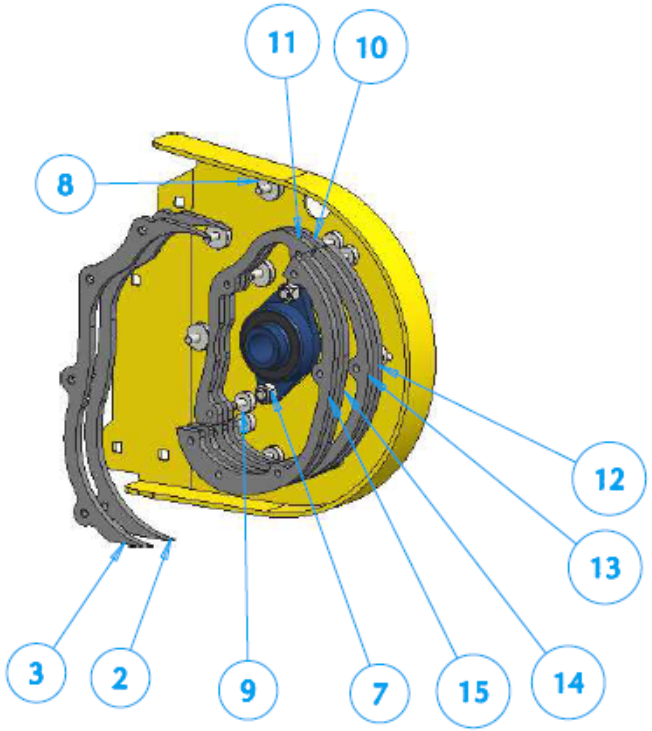

RT 1000

R13101-1800

Ref	Code	Qt	Descrizione	Description	Designation	Descripción
1	72 06	1	Porta acam interno	-Internal ACAM holder	-	-
2	72 09	1	Pista acam forata esterna	-Thr. external ACAM track	-	-
3	72 10	1	Pista acam filett. esterna	-Thr. external ACAM track	-	-
4	64 98	1	Piastra prot albero pick-up	-Protection plate for Pick-Up shaft	-	-
5	26 26	2	Vite TE int.fil.UNI 5739 M14X40-8.8	-Screw TE UNI 5739 M8x16	-	-
6	61 77	1	SKF FYTB 35 WF	-Pickup shaft bearing	-	-
7	20 48	2	Dado autobb. alto M14 7473	-Self-Locking nut M14 7473	-	-
8	64 80	7	Distanziale per acam Ø32	-ACAM spacer Ø24.5		
9	73 84	5	Distanziale per acam Ø24.5	-ACAM spacer Ø24.5		
10	73 85	1	Pista acam forata interna post.	-Thr. internal ACAM track rear	-	-
11	73 86	1	Pista acam filettata interna post.	-Thr. internal ACAM track rear	-	-
12	73 89	1	Pista acam forata interna anter. A	-Thr. internal ACAM track anterior A	-	-
13	73 90	1	Pista acam filettata interna anter.A	-Thr. internal ACAM track anterior A	-	-
14	73 87	1	Pista acam forata interna anter. B	-Thr. internal ACAM track anterior B	-	-
15	73 88	1	Pista acam filettata interna anter. B	-Thr. internal ACAM track anterior B	-	-
16	29 38	11	Rondella zigrinata Ø 10	-Galvanized washer Ø10	-	-
17	30 05	12	Vite TBEI UNI ISO 7380 M10X35	-Screw TSBEI UNI 10x35	-	-

RT 1000

ROC

R13101-0500-M

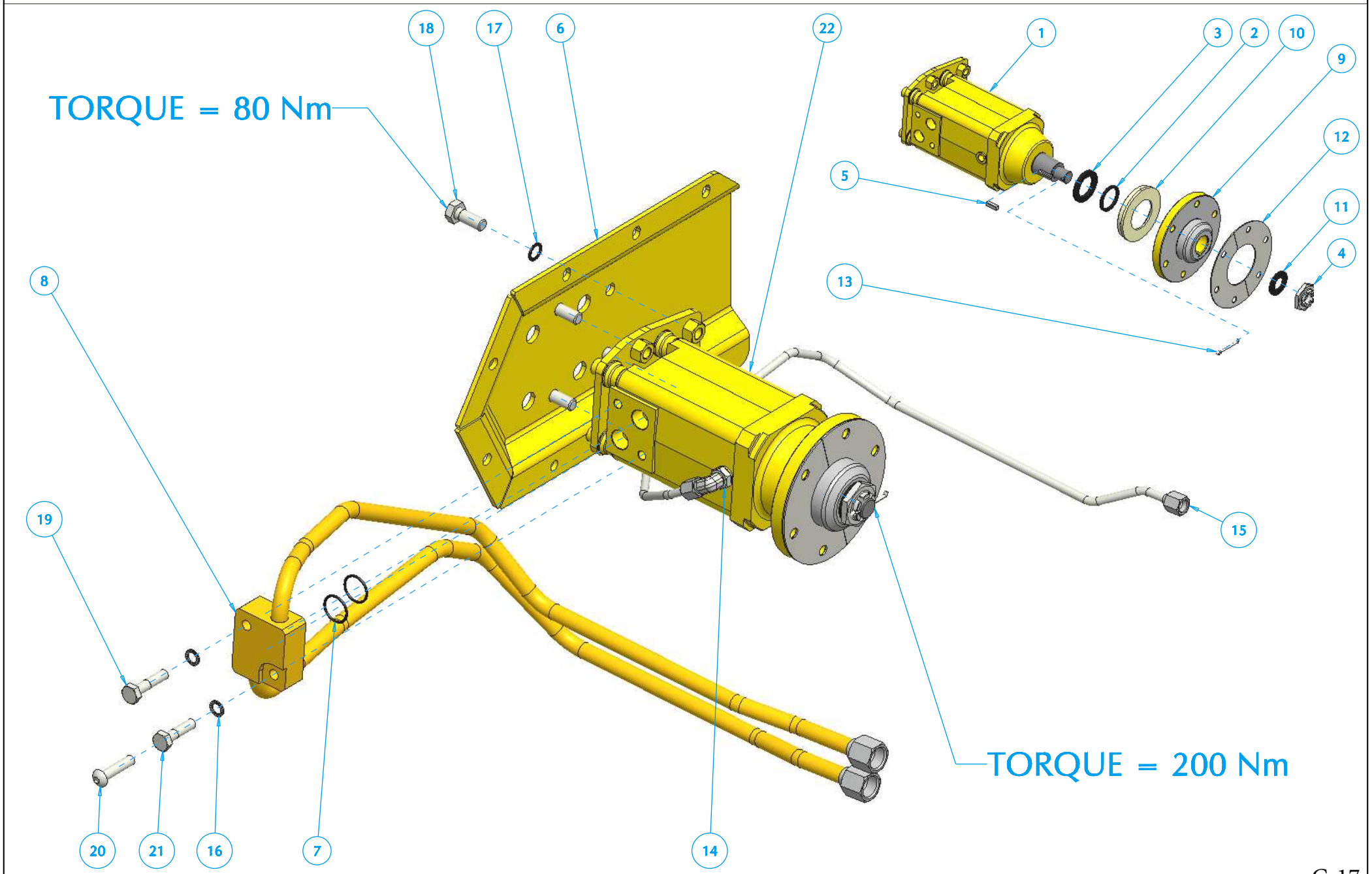

RT 1000

ROC

R13101-0500-M

Ref	Code	Qt	Descrizione	Description	Designation	Beschreibung
1	64 26	1	Motore idr. pick-up con supp.	Pickup hydr.engine with support		
2	63 97	1	Parapolvere mot. idr. pick-up	Pickup hydr.engine duster seal		
3	61 55	1	Paraolio mot. idr. pick-up	Oil ret.for pick-up hydr.engine		
4	32 40	1	Dado a corona speciale20x1.5	Nicked nut 20x1.5		
5	32 41	1	Linguetta UNI 6604 B 6X6X20	Wrench UNI 6604 B 6x6x20		
6	60 61	1	Supporto motore idraulico	Support for hydraulic engine		
7	31 43	2	OR 132 = 23.8 x 29 x 2.6	OR 132 = 23.8x29x2.6		
8	61 96	1	Tubazione per motore pick-up	Tube for pick-up hydr. engine		
9	61 46	1	Flangia per motore idr. pick-up	Flange for pick-up hydr. engine		
10	61 74	1	Anello di rasamento in plastica	Ring for pick-up motor guard		
11	29 68	1	Rond. Spring 40x20.4x2.5	Screw 40x20.4x2.5		
12	64 19	2	Spessore x flangia motore	Spacer for motor flange		
13	21 30	1	Copiglia UNI 1336 4X40	Split pins UNI 1336 4x40		
14	31 62	1	Curva 90° orient. 1/4 gas 1/2	Bend 90° 1/4 gas 1/2		
15	62 71	1	Tubo in ferro per drenaggio	Draining iron tube		
16	29 38	2	Rondella zigrinata Ø 10	Galvanized washer Ø 10		
17	21 85	4	Rondella zigrinata Ø 12	Galvanized washer Ø 12		
18	17 89	4	Vite TE int.fil.UNI 5739	Screw TE int. fil. UNI 5739		
19	25 86	1	Vite TE parz.fil.UNI5737	Screw TE full thread UNI 5737		
20	35 02	1	Vite TBEI UNI ISO 7380	Screw TBEI UNI ISO 7380		
21	33 33	1	Vite TE parz.fil.UNI5737	Screw TE full thread UNI 5737		
22	61 91	1	Kit mot. idr. pick-up con flangia	Fl. kit for pick-up hydr.engine		

PICK-UP 5 RODS

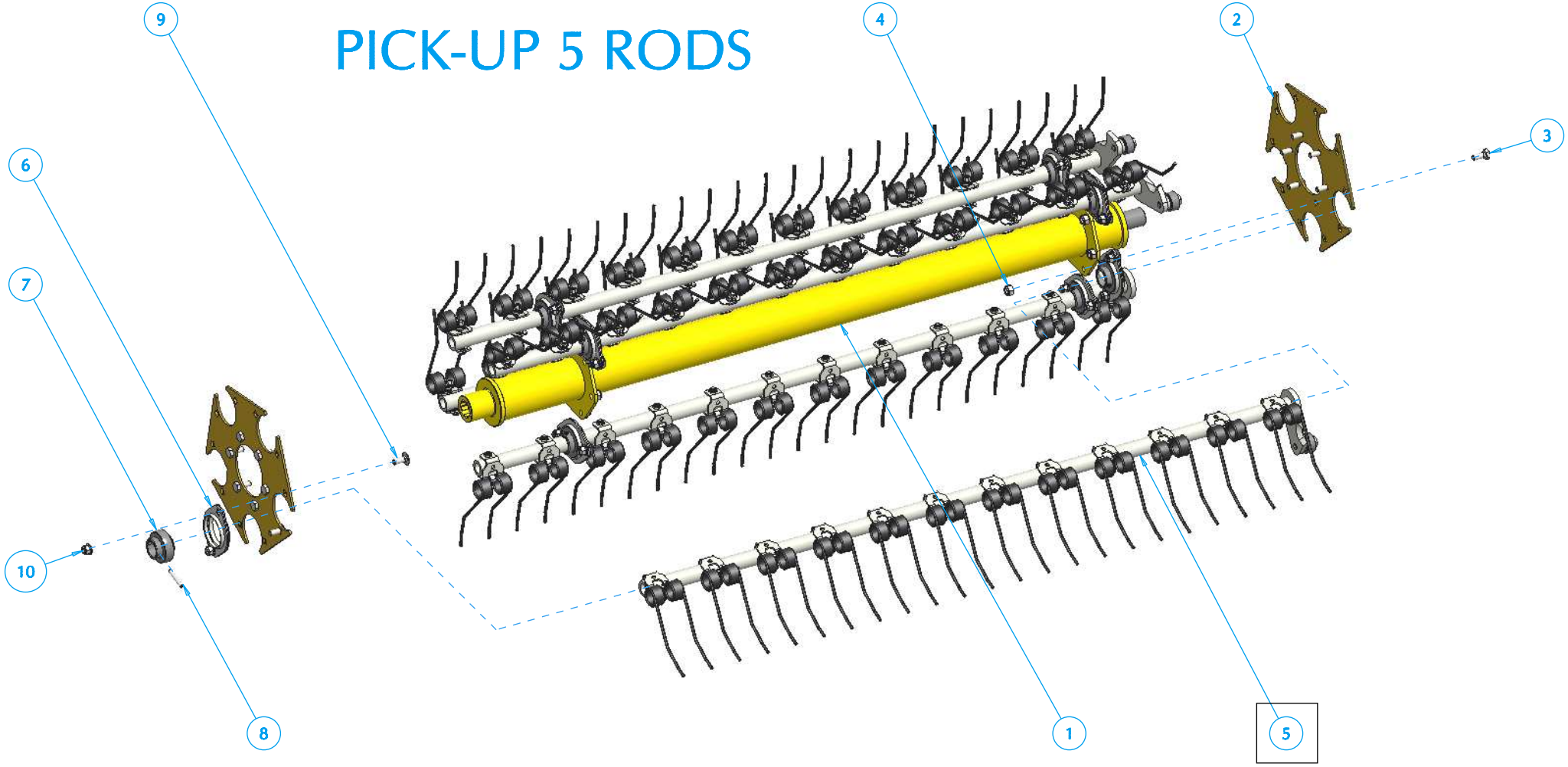

RT 1000

ROC

R13101-060B-M

Ref	Code	Qt	Descrizione	Description	Designation	Beschreibung
1	61 64	1	Rullo pickup SX laterale	Left side pick-up roller		
2	66 44	2	Flangia rullo pick-up	Flange for pick-up roller		
3	26 81	12	Vite TE int.fil.UNI 5739	Screw TE UNI 5739		
4	02 34	12	Dado autobb. alto M10	Self-locking nut M10 7476		
5	R13101-190B	5	Vedi pag. C-27	See page C-27		
6	61 76	10	Supp in lamiera PFT 62	Support plated pad PFT 62		
7	61 75	10	Cusc asta pickup portam	Spring-holder arm bearing		
8	29 97	10	Spina elastica Ø 7x45	Elastic pin Ø 7x45		
9	30 12	20	Vite 10x25x4	Screw 10x25x4		
10	22 29	20	Dado autobb. flang	Flanged self-locking nut		

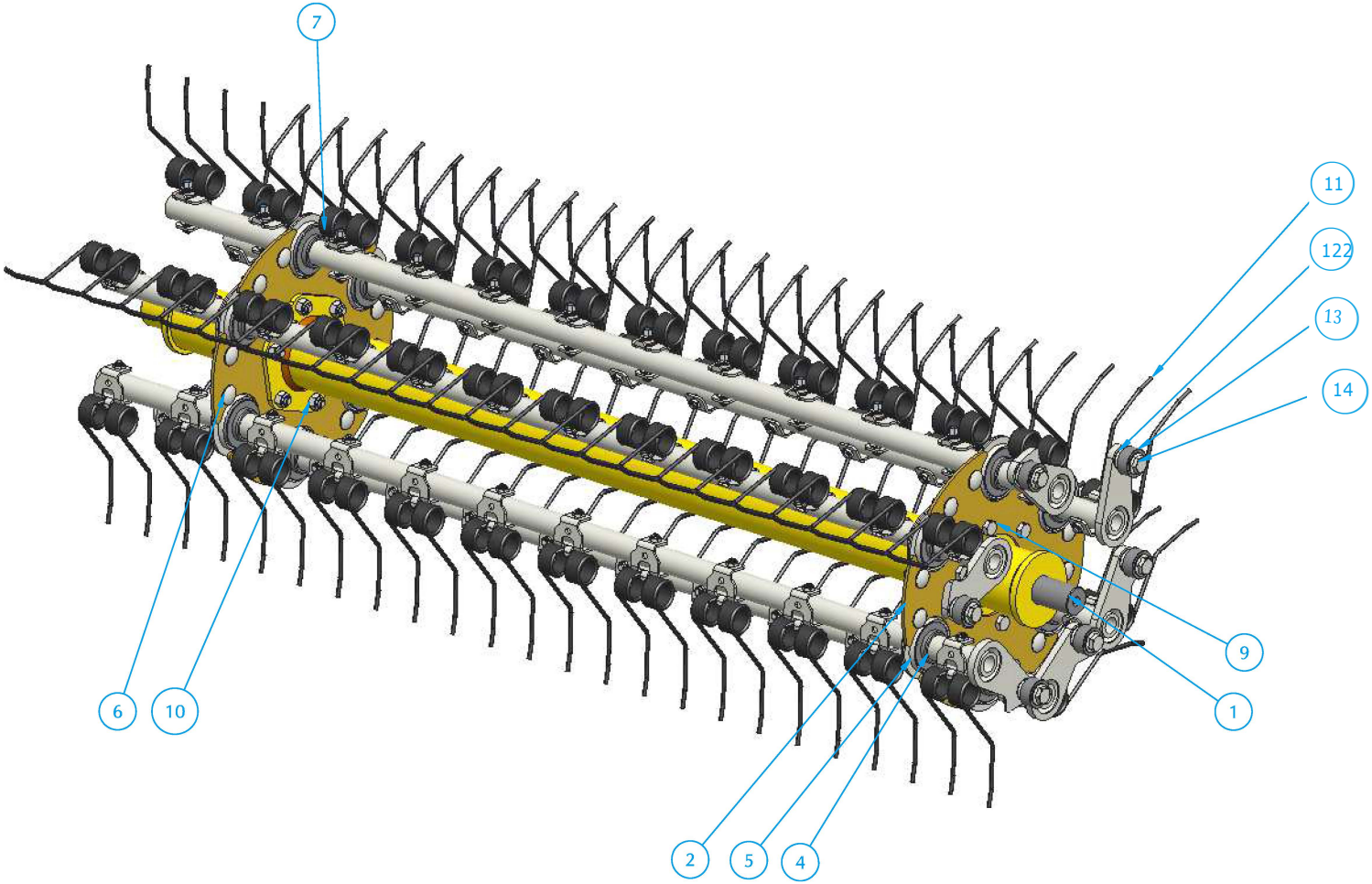

NEW
PICK-UP 6 RODS

RT 1000

R13101-060C

Ref.	Code	Qt	Descrizione	Description	Designation	Beschreibung
1	61 64	1	Rullo pickup SX centr.	LEFT central pickup roller		
2	72 04	2	Flangia rullo pickup	Pickup roller flange		
4	61 75	12	Cuscinetto asta pickup	Pickup axle pad		
5	61 76	12	Supp. in lamiera PFT12	Plate PFT12		
6	30 12	24	Vite 10x25x4	Screw 10x25x4		
7	22 29	24	Dado autoblocc. 10	Self-locking nut 10		
8	29 97	12	Spina elastica Ø7x45	Elastic plug Ø7x45		
9	26 81	12	Vite TE UNI M10X25	Screw TE UNI M10X25		
10	02 34	12	Dado autoblocc. M10	Self-locking nut M10		
11	72 22	72	Molla pickup 6 aste	6bars pickup spring		
12	60 24	6	Boccola dist.cuscinetto	Bushing spacer for pad		
13	61 36	6	Cuscinetto ACAM12x35x16	ACAM bearing 12x35x16		
14	30 53	6	Vite spec. 12x35	Special screw 12x35		

PICK-UP 5 RODS

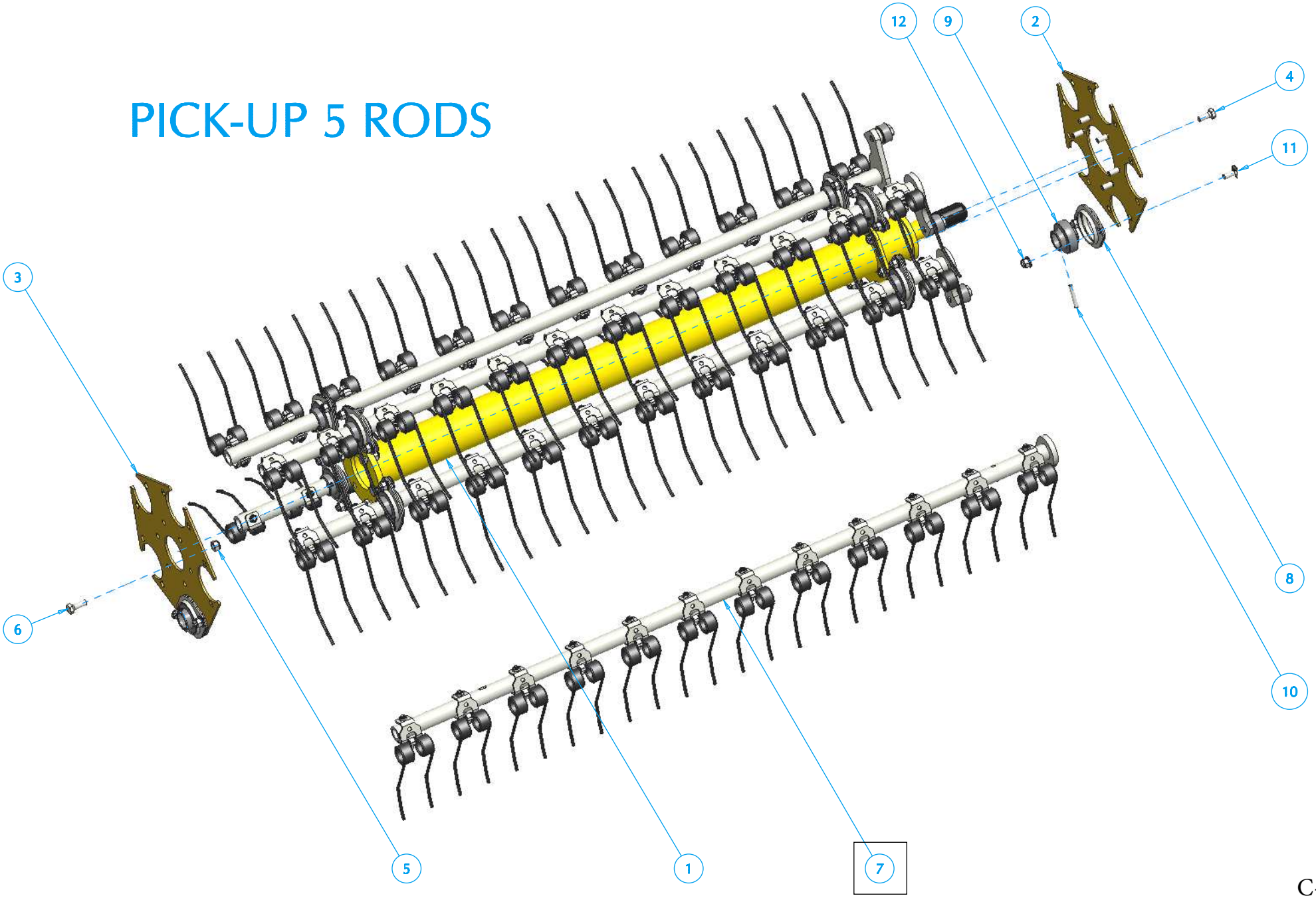

RT 1000

ROC

R13101-070B-M

Ref	Code	Qt	Descrizione	Description	Designation	Beschreibung
1	61 66	1	Rullo pickup DX laterale	Right side pick-up roller		
2	66 44	1	Flangia rullo pick-up	Flange for pick-up roller		
3	66 43	1	Flangia rullo pick-up	Flange for pick-up roller		
4	26 81	6	Vite UNI 5739 M10X25	Screw TE UNI 5739 M10x25		
5	02 34	12	Dado autobb. M10 7473	Self-locking nut M10 7476		
6	26 82	6	Vite TE UNI 5739 M10X30	Screw UNI5739 M10x30		
7	R13101-190B	5	Vedi pag. C-27	See page C-27		
8	61 76	10	Supp in lamiera PFT 62	Support pad PFT 62		
9	61 75	10	Cusc asta pickup portam	Spring-holder arm bearing		
10	29 97	10	Spina elastica Ø 7x45	Elastic pin Ø 7x45		
11	30 12	20	Vite quad. 10x25x4	Screw 10x25x4		
12	22 29	20	Dado autobb. fl 10 6926	Fl.self-locking nut 10 6926		

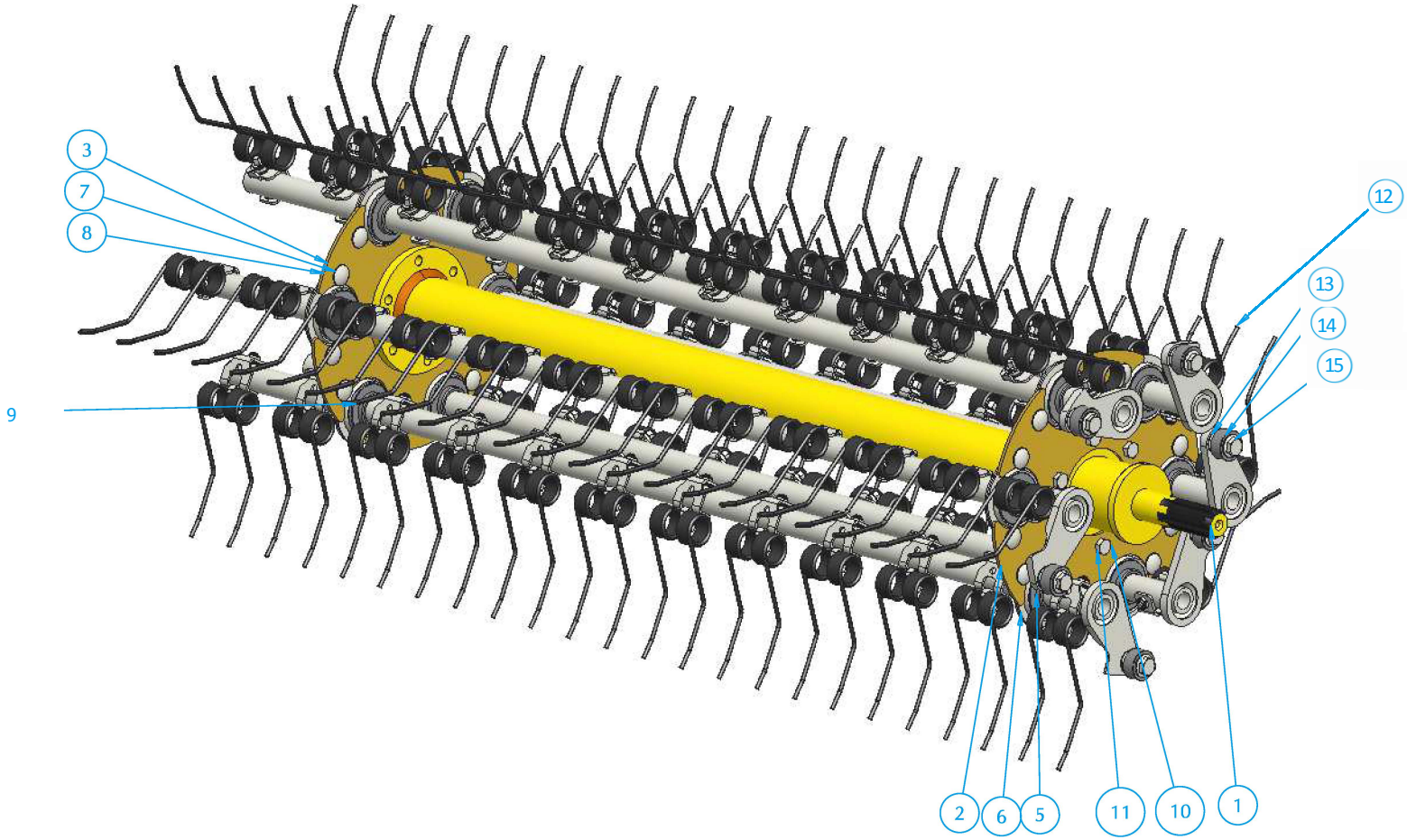

NEW
PICK-UP 6 RODS

RT 1000

R13101-070C

Ref.	Code	Qt	Descrizione	Description	Designation	Beschreibung
1	61 66	1	Rullo pickup laterale DX	RIGHT lat. pickup roller		
2	72 04	1	Flangia rullo pickup	Pickup roller flange		
3	72 03	1	Flangia rullo pickup mot.	Motor-side pickup roll.flange		
5	61 75	12	Cuscin. asta pickup portam.	Spring-holder axle bearing		
6	61 76	12	Supporto in lamiera PFT12	Plate support PFT12		
7	30 12	24	Vite 10x25x4	Screw 10x25x4		
8	22 29	24	Dado autobl.10 6926	Self-locking nut 10 6926		
9	29 97	12	Spina elastica Ø7x65	Electric plug Ø7x65		
10	26 81	6	Vite TE UNI 5739 M10X25	Screw TE UNI 5739 M10X25		
11	02 34	6	Dado autobl. M10 7473	Self-locking nut M10 7473		
12	72 22	72	Molla pickup RT	RT pickup spring		
13	60 24	6	Boccola dist. cuscinetto	Bushing spacer pickup pad		
14	61 36	6	Cuscinetto ACAM 12x35x16	ACAM bearing 12x35x16		
15	30 53	6	Vite speciale 12x35	Special Screw 12x35		

PICK-UP 5 RODS

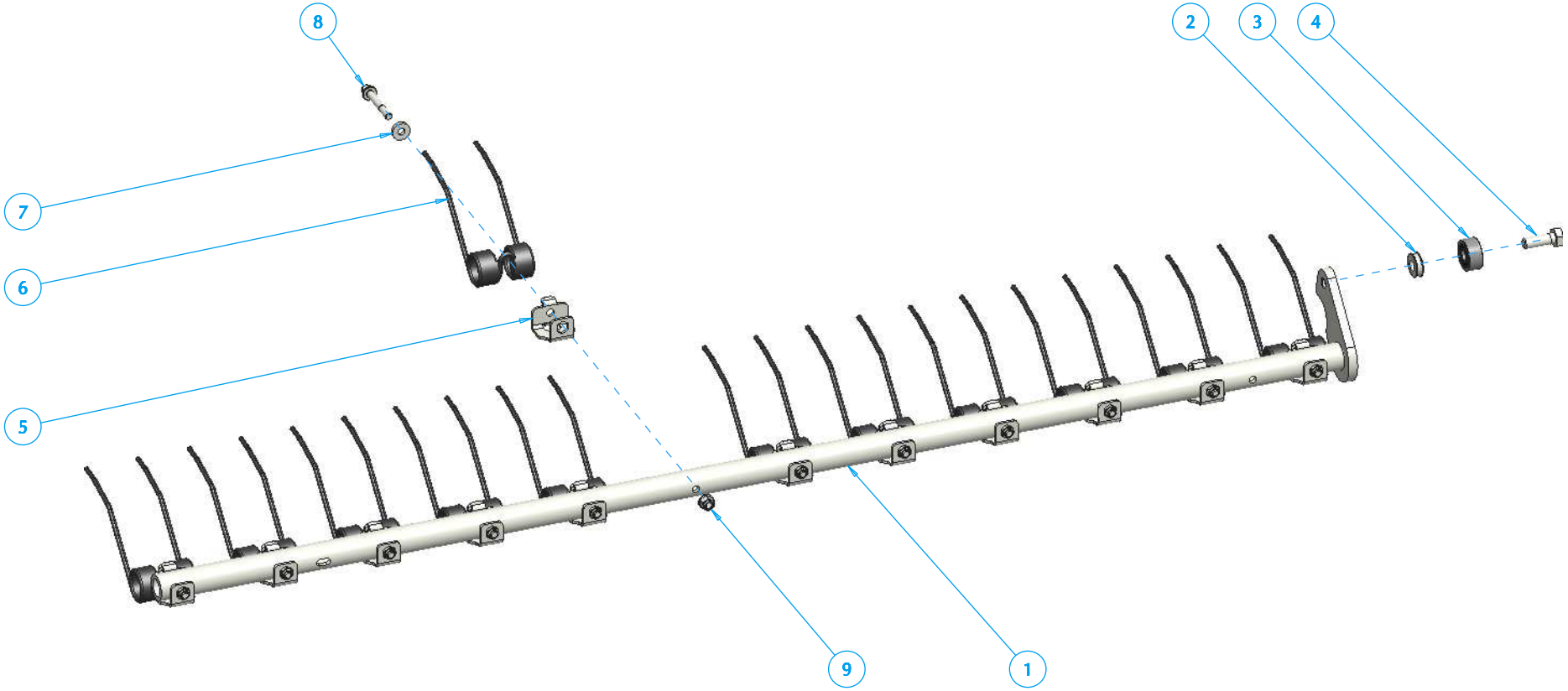

RT 1000

ROC

R13101-190B-M

Ref	Code	Qt	Descrizione	Description	Designation	Beschreibung
1	66 65	1	Asta pick-up lunga tipo 5 stecc.	Long pick-up rod		
2	60 24	1	Distanziale per cuscinetto	Bushing spacer pick-up pad		
3	61 36	1	Cuscinetto acam	Acam bearing		
4	30 53	1	Vite TE int.fil.UNI 5739 M12X35	Screw TE UNI 5739 M12x35		
5	66 25	12	Piastra a U per molla pick-up	U-plate for 5bars springs		
6	66 22	12	Molla pick-up x rt -5 aste	5 bars pick up spring		
7	35 03	12	Rondella piana 8.5x20x4	Washer 8.5x20x4		
8	35 62	12	Vite speciale 8x55 esagono 10	Hexagonal screw 8x55 10		
9	16 98	12	Dado autobb. flangiato 8 6926	Self-locking nut 8 6926		

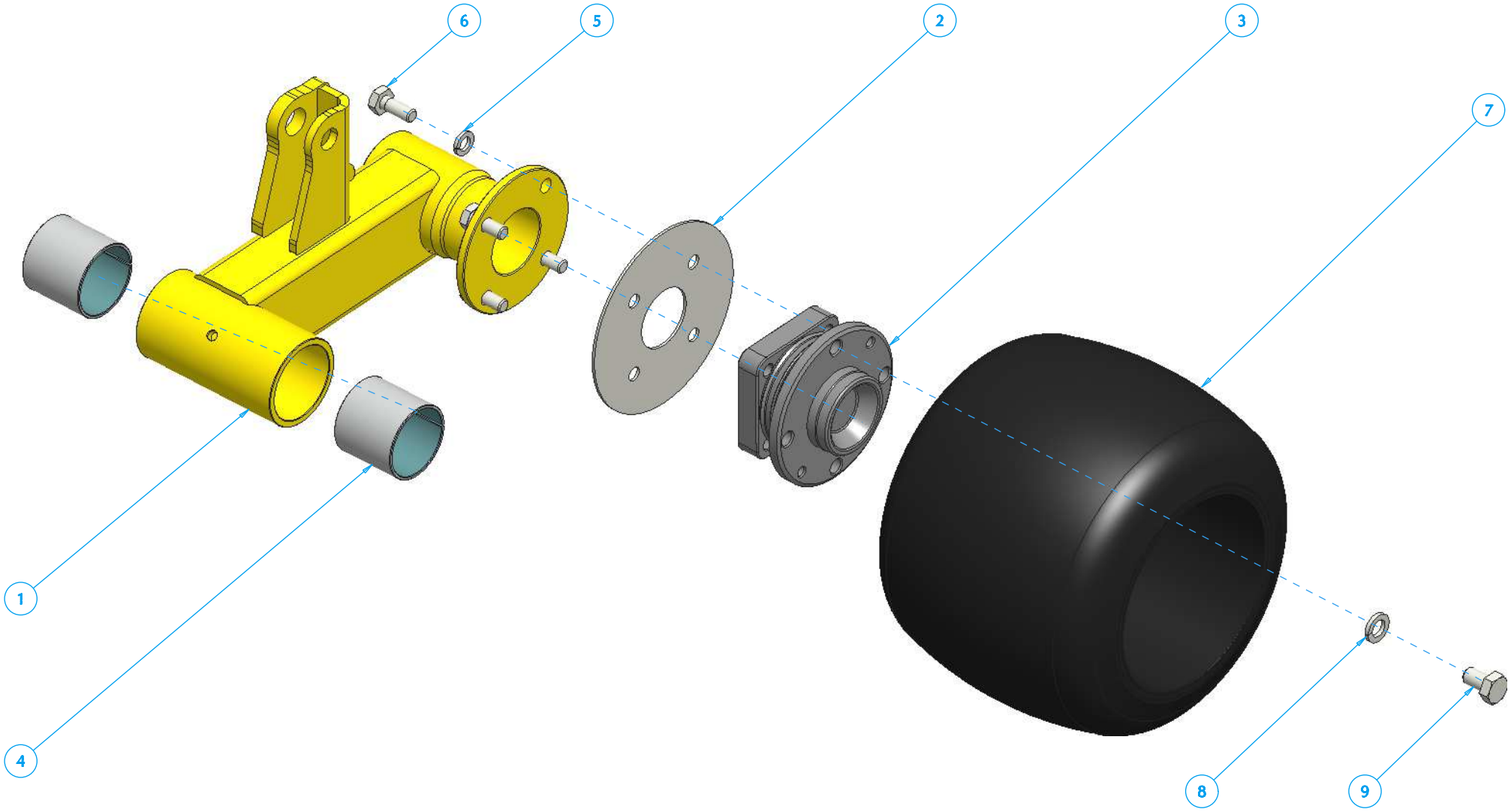
6
5
2
3
7
1
4
8
9

RT 1000

ROC

R13101-1400-M

Ref	Code	Qt	*Descrizione*	*Description*	*Designation*	*Beschreibung*
1	60 17	1	Supporto ruotina destro	Support for RIGHT sm.wheel		
2	64 97	1	Flangia Ø142 protez. ruot	Flange Ø142 prot. for sm.wheel		
3	00 30	1	Cuscinetto ruota con fl	Flanged bearing for wheel		
4	61 54	2	Boccola Ø 50x50	Bushing for small wheels Ø 50		
5	03 13	4	Rondella spacc rinf. Ø 10	Reinforced split washer Ø 10		
6	25 17	4	Vite TE int.fil.UNI5740	Screw TE int. fil. UNI570		
7	60 03	1	Ruotina larga	Large small wheel		
8	26 06	4	Rondella spacc rinf. Ø 12	Reinforced split washer Ø12		
9	25 90	4	Vite TE int.fil.UNI5740	Screw TE int. fil. UNI5740		

RT 1000

ROC

R13101-1500-M

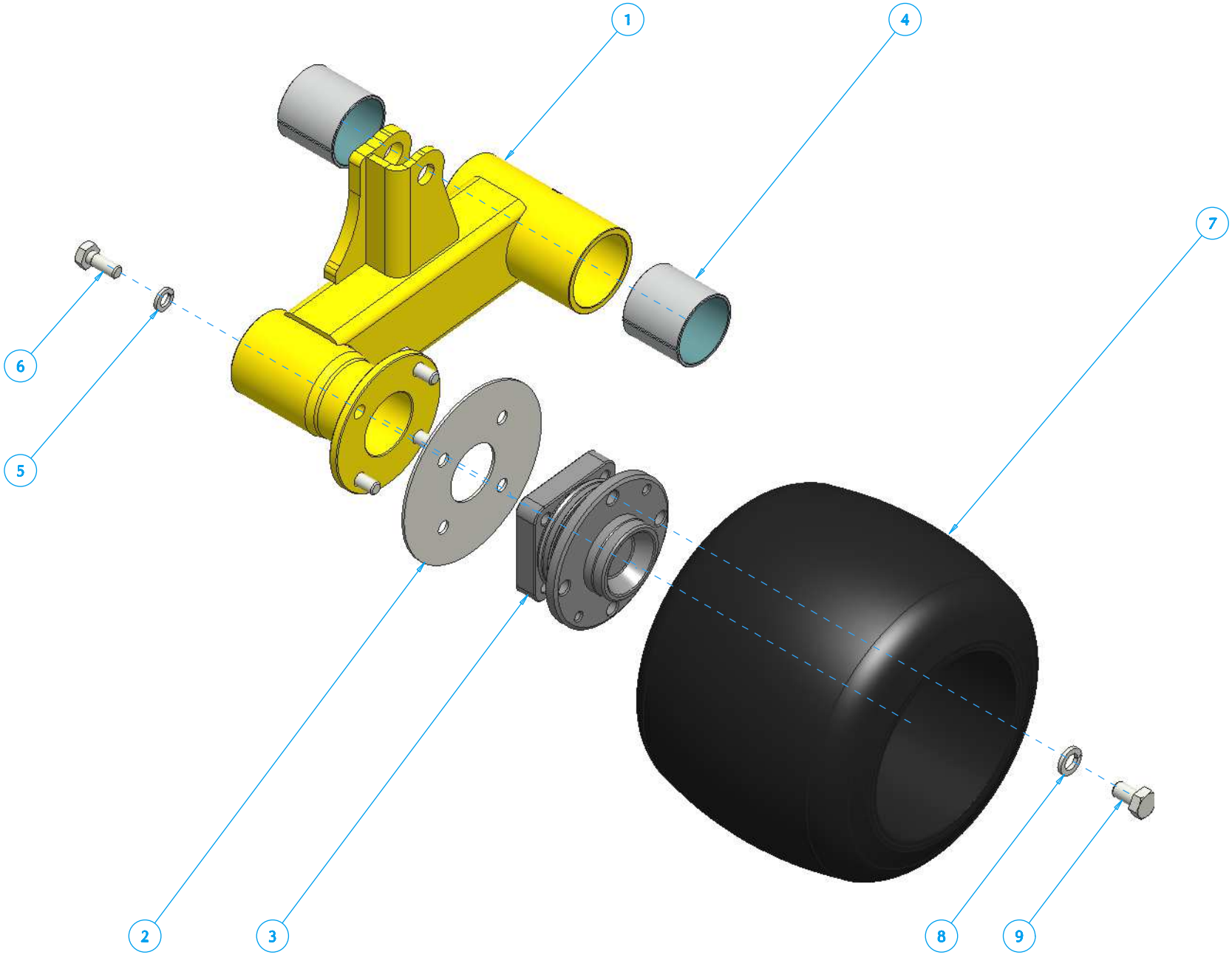

RT 1000

ROC

R13101-1500-M

Ref	Code	Qt	*Descrizione*	*Description*	*Designation*	*Beschreibung*
1	60 18	1	Supporto ruotina sinistro	Support for LEFT sm.wheel		
2	64 97	1	Flangia Ø142 protez. ruotina	Sm.wheel flange Ø142 prot.		
3	00 30	1	Cuscinetto ruota con flangia	Flanged bearing for wheel		
4	61 54	2	Boccola Ø 50x50	Bushing for sm.wheels Ø50		
5	03 13	4	Rondella spaccata rinf. Ø 10	Reinf.split washer Ø10		
6	25 17	4	Vite TE int.fil.UNI5740	Screw TE int. fil. UNI570		
7	60 03	1	Ruotina larga	Large small wheel		
8	26 06	4	Rondella spaccata rinf. Ø 12	Reinf.split washer Ø12		
9	25 90	4	Vite TE int.fil.UNI5740	Screw TE int. fil. UNI5740		

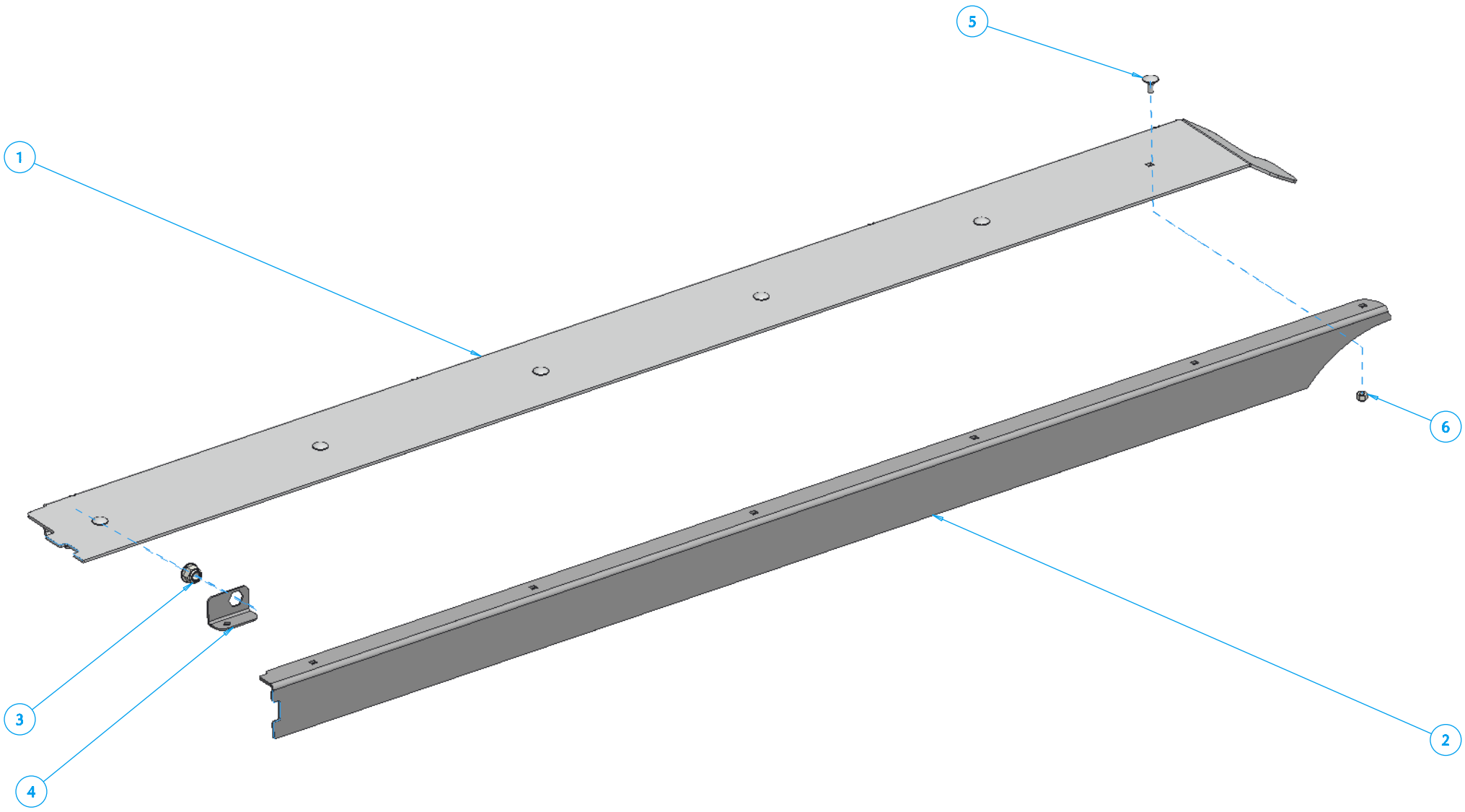
5
1
6
3
4
2

RT 1000 R13101-7510_M

Ref	Code	Qt	*Descrizione*	*Description*	*Designation*	*Beschreibung*
1	71 18	1	Spondina superiore destra	RIGHT upper bumper		
2	71 19	1	Spondina appoggio front. DX	RIGHT frontal supp. bumper		
3	16 98	4	Dado autobb. flangiato 8 6926	Fl.self-locking nut 8 6926		
4	71 29	4	Piastrino ferma dado spondina ant.	Fr. bumper nut-locking plate		
5	37_50	10	Vite quad. sotto testa 5x12x3.5	Steel squared screw 5x12x3.5		
6	21 86	10	Dado autobb. alto M 5 7473	Self-locking nut M 5 7473		

ROC

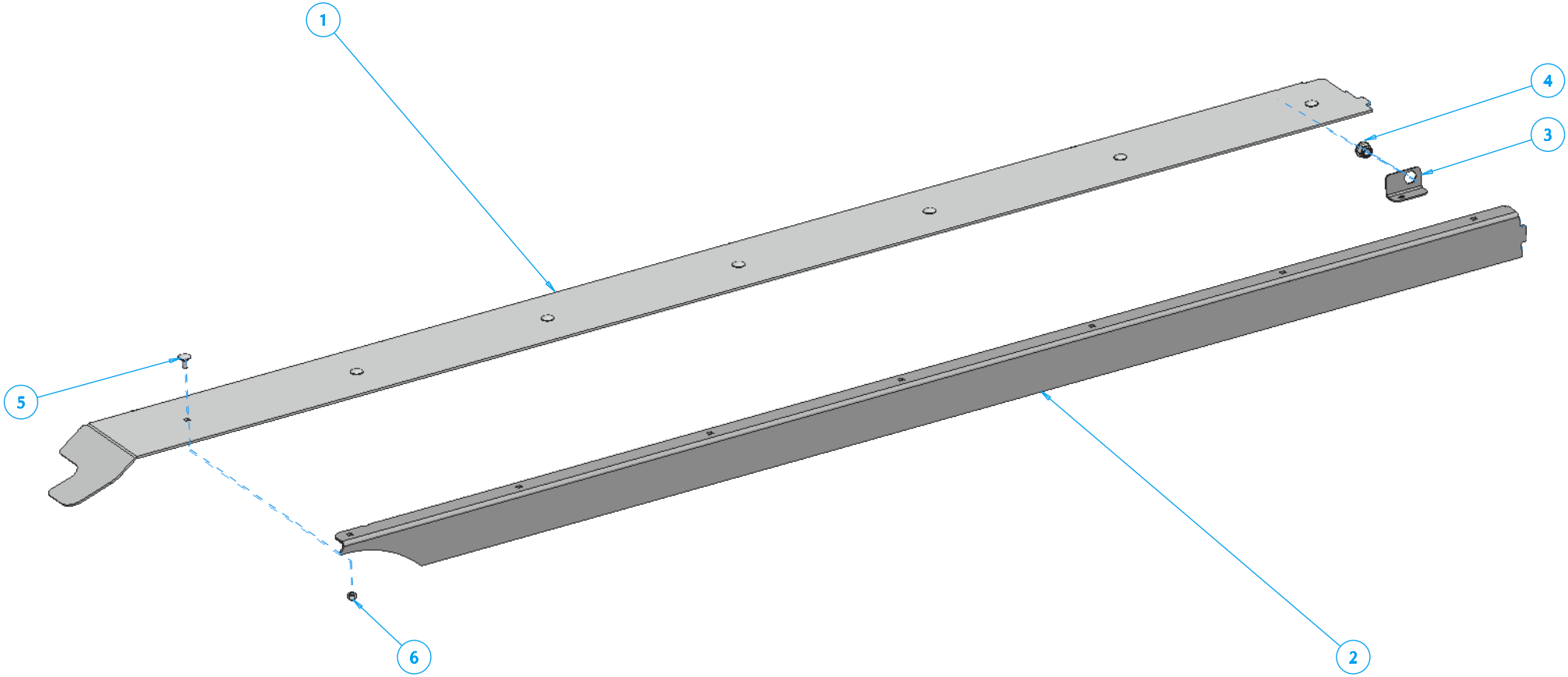
1
2
3
4
5
6

RT 1000 R13101-7520_M

Ref	Code	Qt	*Descrizione*	*Description*	*Designation*	*Beschreibung*
1	71 21	1	Spondina superiore sinistra	LEFT upper bumper		
2	71 22	1	Spondina appoggio front. SX	LEFT frontal support bumper		
3	71 29	5	Piastrino ferma dado spondina ant.	FRONT bumper nut-locking plate		
4	16 98	5	Dado autobb. flangiato 8 6926	Fl.self-locking nut 8 6926		
5	37_50	12	Vite quad. sotto testa 5x12x3.5	Steel squared screw 5x12x3.5		
6	21 86	12	Dado autobb. alto M 5 7473	Self-blocking nut M5 7473		

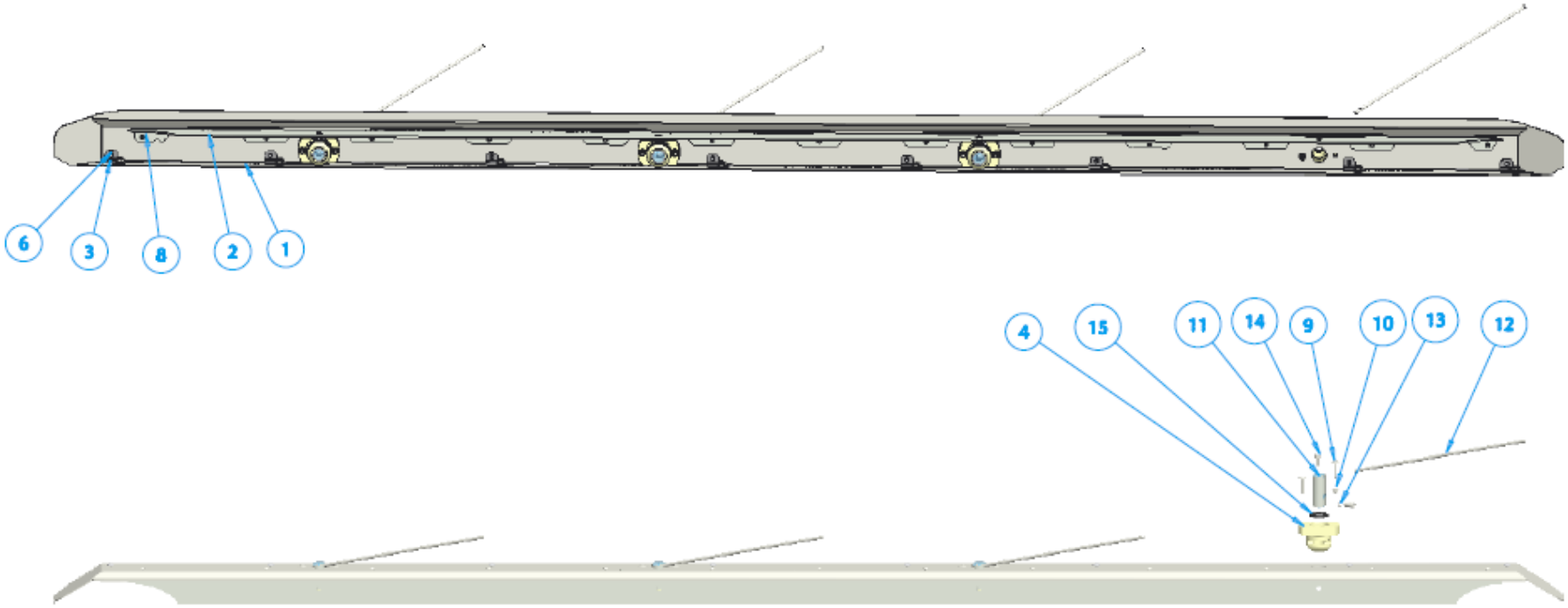
6
3
8
2
1
4
15
11
14
9
10
13
12

RT 1000

ROC

R13110-0000-M

Ref	Code	Qt	Descrizione	Description	Designation	Descripción
1	72 12	1	Supporto deflettore pick-up 3 mt	-bar support for pickup 3 mt.	-	-
2	72 13	1	Sponda supporto deflet. pick-up 3 mt	-side bar support for pickup 3 mt.		
3	72 11	8	Piastrino dx ferma dado spondina ant	-side right locking nut for litlle plate		-
4	71 77	4	Supporto perno deflettore	-side pin support		
5	16 98	8	Dado autobb. flangiato 8 6926	-8 MA flanged locking nut	-	-
6	37_50	8	Vite quad. sotto testa 5x12x3.5	-Stainless steel screw 5x12	-	-
7	21 86	21	Dado autobb. alto M 5 7473	-Selflocking nut 5 MA	-	-
8	30 35	13	Vite TBEI UNI ISO 7380 M5X12	-Screw 5X12 MA button	-	-
9	25 84	8	Vite quad. sotto testa 6x30x4	-Screw 6x30 MA TTQST 8.8	-	-
10	25 22	8	Dado autobl.flangiato M6 6926	-Flanged self-locking nut 6 MA	-	-
11	64 43	4	Perno porta asta deflettore	-Deflector bar pin		
12	64 20	4	Asta in acciaio Ø 6	-Steel bar Ø 6		
13	21 83	4	Rondella zigrinata Ø 6	-Galvanized washer Ø 6 Schnorr	-	-
14	25_63	8	Vite testa cilind. 6-16-U5931	-Socket Head screw 6X16 MA	-	-
15	33 40	4	Parapolvere Ø 25/35/4	-Dust seal Ø 25x35x4		

RT 1000

ROC

R13102-0000-M1

C-1

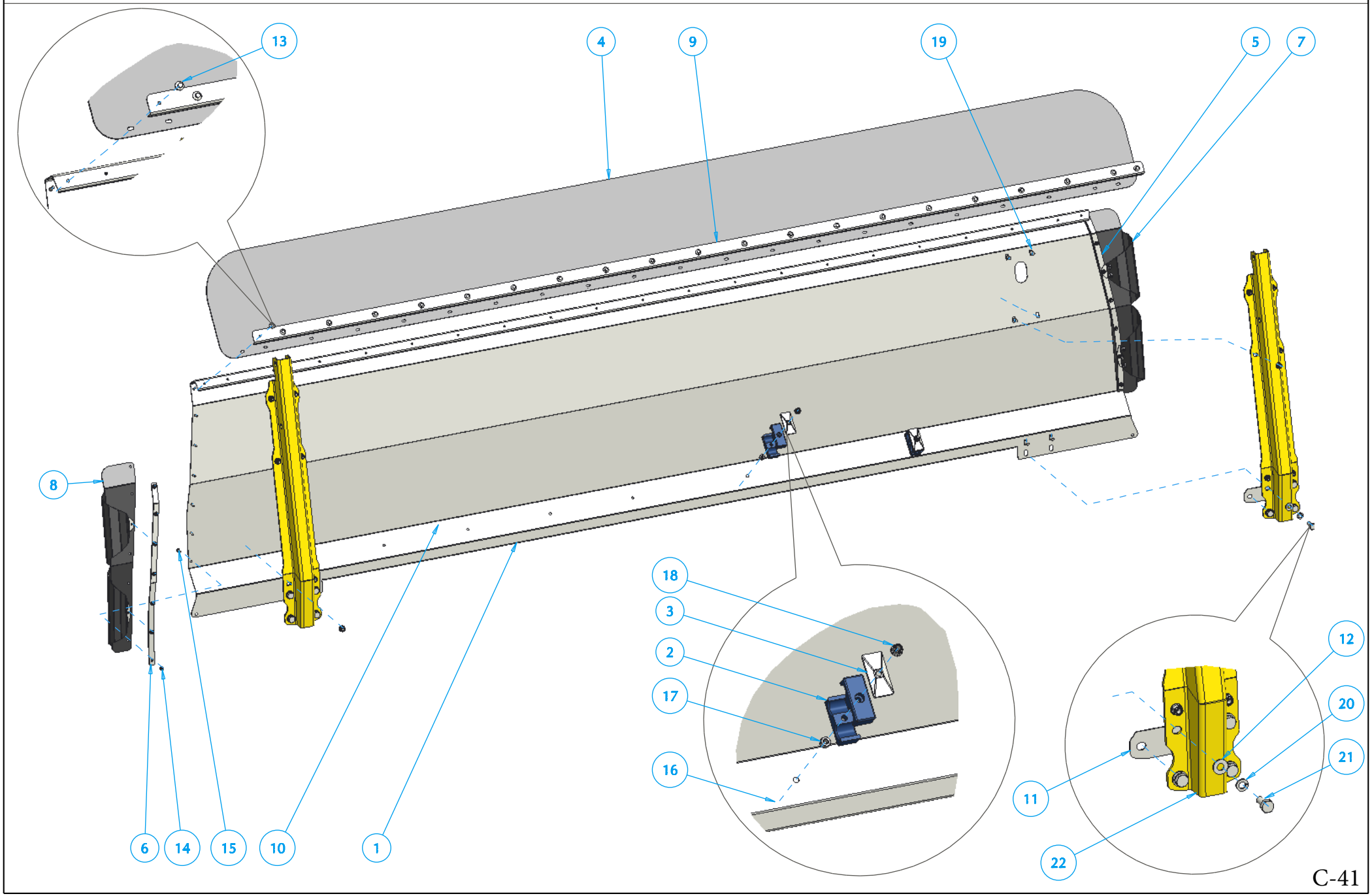

RT 1000

ROC

R13102-0000-M1

Ref	Code	Qt	Descrizione	Description	Designation	Beschreibung
1	62 84	1	Lamiera inox post nast lat	Rear panel for lateral belt		
2	32 05	4	Fermatubo doppio Ø 20	Double tube-holder Ø20		
3	32 06	2	Piastra x ferma tubo CF3	Tube-holder plate CF3		
4	61 51	1	Sponda prolunga plas. lat	LATERAL edge extension		
5	63 94	1	Piastra ferma prot sponda dx	RIGHT fixing plate protection		
6	63 93	1	Piastra ferma prot sponda sx	LEFT fixing plate protection		
7	63 85	1	Protezione later. Dxsponda	RIGHT edge protection		
8	63 87	1	Protezione later. Sx sponda	LEFT edge protection		
9	63 95	1	Piastra ferma sponda prol lat	Edge plate for lat. extension		
10	64 45	1	Spondina appoggio nastro lungo	Closing plate for lateral belt		
11	64 38	2	Spessore per supporto omega	Spacer for omega support		
12	26 78	8	Rondella piana 10.5x22x2.2	Washer 10.5x22x2.2		
13	34 50	21	Vite M5x16 TE flangiata	Flanged screw M5x16 TE		
14	30 46	35	Dado autobb. flangiato 5 6926	Flanged self-locking nut 5 6926		
15	30 81	14	Vite TBEI UNI ISO 7380 M5X16	Screw TBEI UNI ISO 7380 M5x16		
16	29 88	2	Vite button flang. Ø 8x60	Flanged screw button Ø8x60		
17	30 21	2	Dado esag. alto UNI 5587 M8	Hexagonal nut		
18	16 98	14	Dado autobb. flangiato 8 6926	Flanged self-locking nut 8 6926		
19	25 28	12	Vite quad. sotto testa 8x20x3	Low square headed screw 8x20x3		
20	03 13	8	Rondella spaccata rinf. Ø 10	Split reinforced washer Ø10		
21	26 81	8	Vite TE UNI 5739 M10X25	Screw TE int.fil. UNI 5739 M10x25		
22	69 95	2	Supporto lamiere posteriori	Support for rear plates		

RT 1000

ROC

R13102-0000-M2

C-1

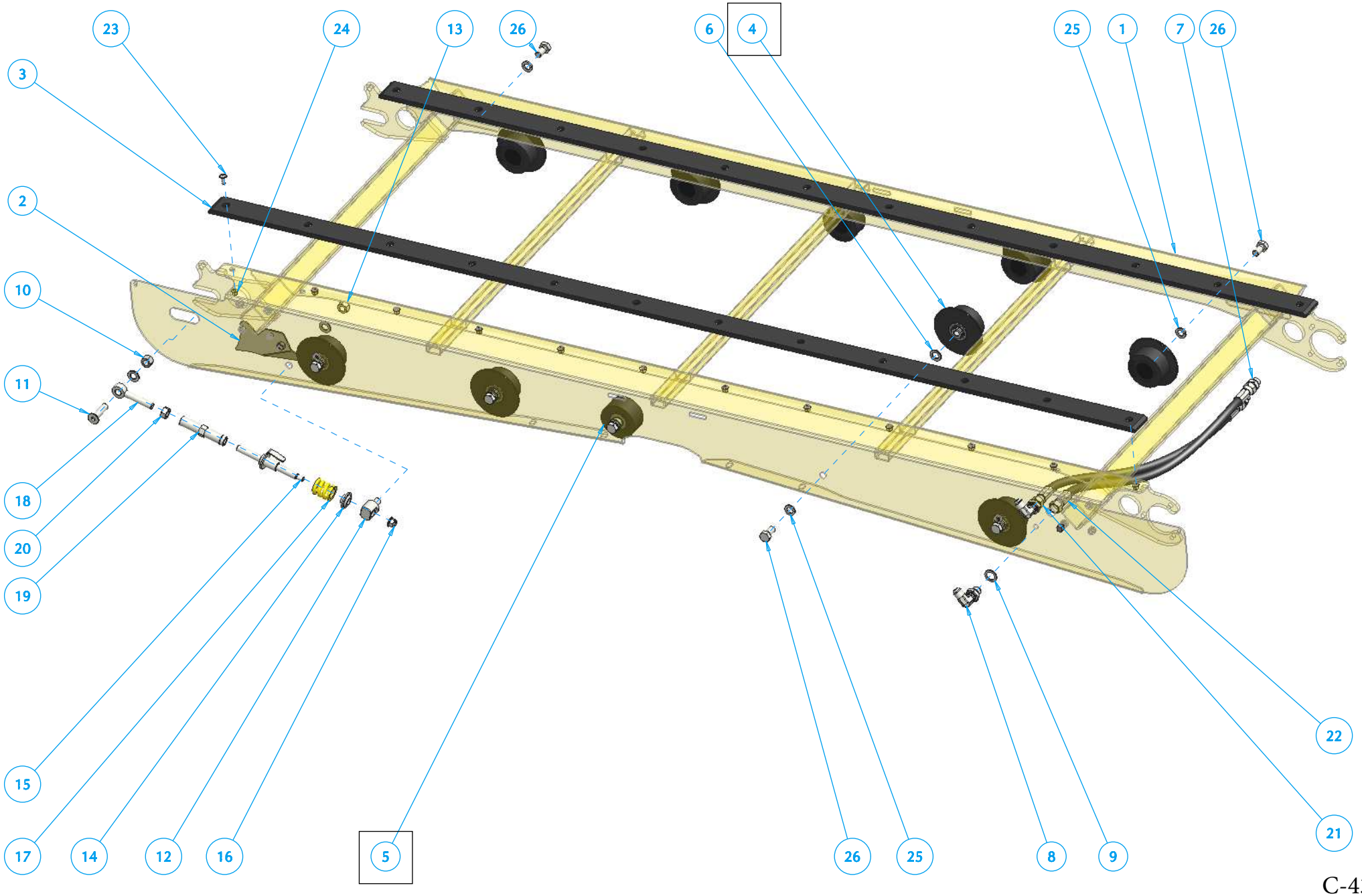

RT 1000

ROC

R13102-0000-M2

Ref	Code	Qt	Descrizione	Description	Designation	Beschreibung
1	61 72	1	Telaio nastro pick up x 3 m	Lateral frame pick-up		
2	67 94	1	Raschiatore nastro SX	Skimmer for left belt		
3	61 52	2	Striscia scorr nastro lateral	Skip for lateral belt		
4	61 17	8	Vedi pag. C-47	See page C-47		
5	61 16	2	Vedi pag. C-49	See page C-49		
6	26 64	7	Rondella 17x30x3	Washer 17x30x3		
7	03 02	2	Niples 1/2 gas 7/8 J	Nipples 1/2 gas 7/8J		
8	31 32	2	Passaparete curva 90°	Curve wall joint 90°		
9	63 90	2	Rondella 22.5 x 32 x 2	Washer 22.5x32x2		
10	00 39	1	Dado normale alto M 16	Normal black nut M 16		
11	64 16	1	Vite speciale 16 x 60	Screw 16x60		
12	64 27	1	Supporto tenditore nastro	Support for belt tight.		
13	01 80	1	Dado autobb. alto M16 7473	High self-locking nut M16		
14	60 55	1	Boccola sagomata in acciaio	Washer for spring support		
15	64 24	1	Asta tenditore porta molla	Tightener bar spring holder		
16	25 24	1	Dado autobb. flang 12 6926	Fl.self-locking nut 12 6926		
17	64 06	1	Molla per tens nastro	Spring for belt tightening		
18	63 35	1	Tirante filettato M 16 DX	Thr.eye tie rod M 16 DX		
19	63 34	1	Manicotto M16 per tenditore	Sleeve for belt tight. M16		
20	28 60	1	Dado esag. UNI 5588 M16	Galv.nut UNI 5588 M16		
21	T0 01	1	Tubo R2 1/2	Hose R2 1/2		
22	T0 01	1	Tubo R2 1/2	Hose R2 1/2		
23	25 40	24	Vite button flang. Ø 8x20	Fl.button screw Ø8x20		
24	16 98	24	Dado autobb. flang 8 6926	Fl.self-locking nut 8 6926		
25	21 89	12	Rondella spaccrinf. Ø 16	Split reinf.washer Ø 16		
26	26 67	12	Vite TE UNI 5739 M16X30	Screw TE UNI 5739 M16x30		

RT 1000

ROC

R13102-0000-M3

C-1

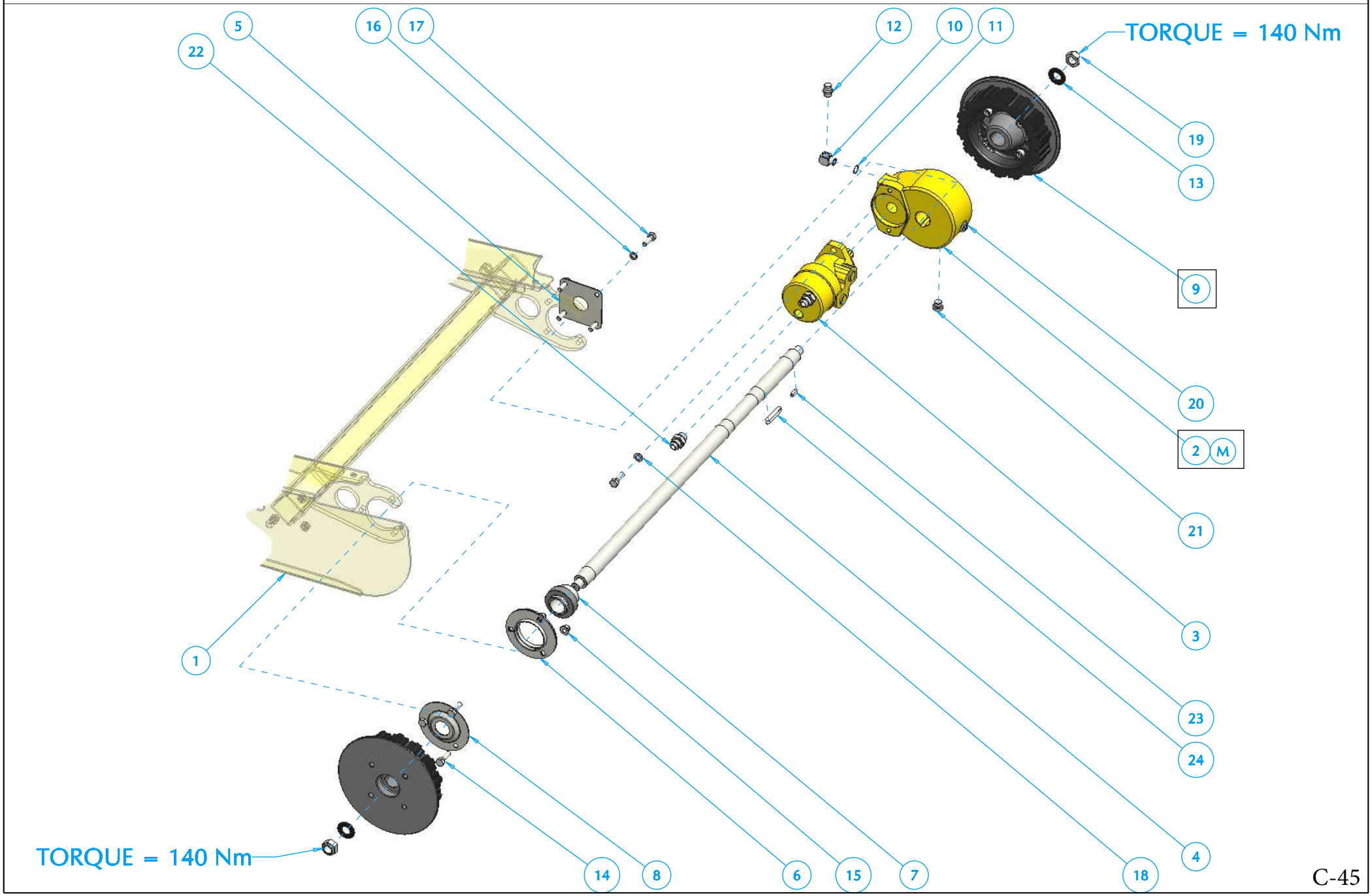

RT 1000

ROC

R13102-0000-M3

Ref	Code	Qt	Descrizione	Description	Designation	Beschreibung
1	61 72	1	Telaio nastro pick up x 3 m	Lateral frame pick-up		
2	61 61	1	Riduttore Nasro	Belt reducer		
3	61 57	1	Motore idraulico per nastro	Belt hydr.engine		
4	60 65	1	Albero motrice nastro	Belt drive shaft		
5	61 30	1	Piastrino protezione ridutt	Prot.plate belt reducer		
6	61 39	1	Supporto in lamiera PF 72	Pad support PF 72		
7	61 38	1	Cusci. albero matroce nastro	Belt drive shaft pad		
8	64 17	1	Protezione cuscinetto	Beating protection		
9	62 95	2	Puleggia nastro assembl *C-51	Belt pulley ASSEMBLED *C-51		
10	33 00	1	Curva 90° 3/8 M-F per rid	90°curve 3/8M-F for gearbox		
11	31 69	1	OR 809 -15.8 -21-2.6	OR 809 - 15.8 - 21-2.6		
12	06 38	1	Tappo sfiato da 3/8 gasX	Vent. cap3/8gas for gearbox		
13	29 68	2	Rond. Spring 40x20.4x2.5	Spring washer 40x20.4x2.5		
14	28 73	5	Vite TE parz.fil.UNI5737	Screw UNI5737 M10x35-8.8		
15	22 29	3	Dado autobb. flangiato 10	Fl.self-locking nut 10		
16	03 13	4	Rondella spaccata rinf. Ø 10	Reinf. split washer Ø 10		
17	26 82	4	Vite TE int.fil.UNI 5739	Threaded screw UNI5739		
18	21 59	2	Rondella FIAT 10.8x20x2.2	FIAT washer 10.8x20x2.2		
19	31 11	2	Dado autobb. 20 x 1.5	Self-locking nut 20x1.5		
20	33 73	1	Tappo spia olio 3/8 gas	Oil light cap 318 gas		
21	31 79	1	Tappo esag. incas. 3/8 gas	Hexagonal oil cap 3/8 gas		
22	03 02	2	Niples 1/2 gas 7/8 J	Niples 1/2 gas 7/8J		
23	31 03	2	Chiavetta 6 x 6 x 22	Spline 6x6x22		
24	30 38	1	Chiavetta 10 x 8 x 60	Spline 10x8x60		

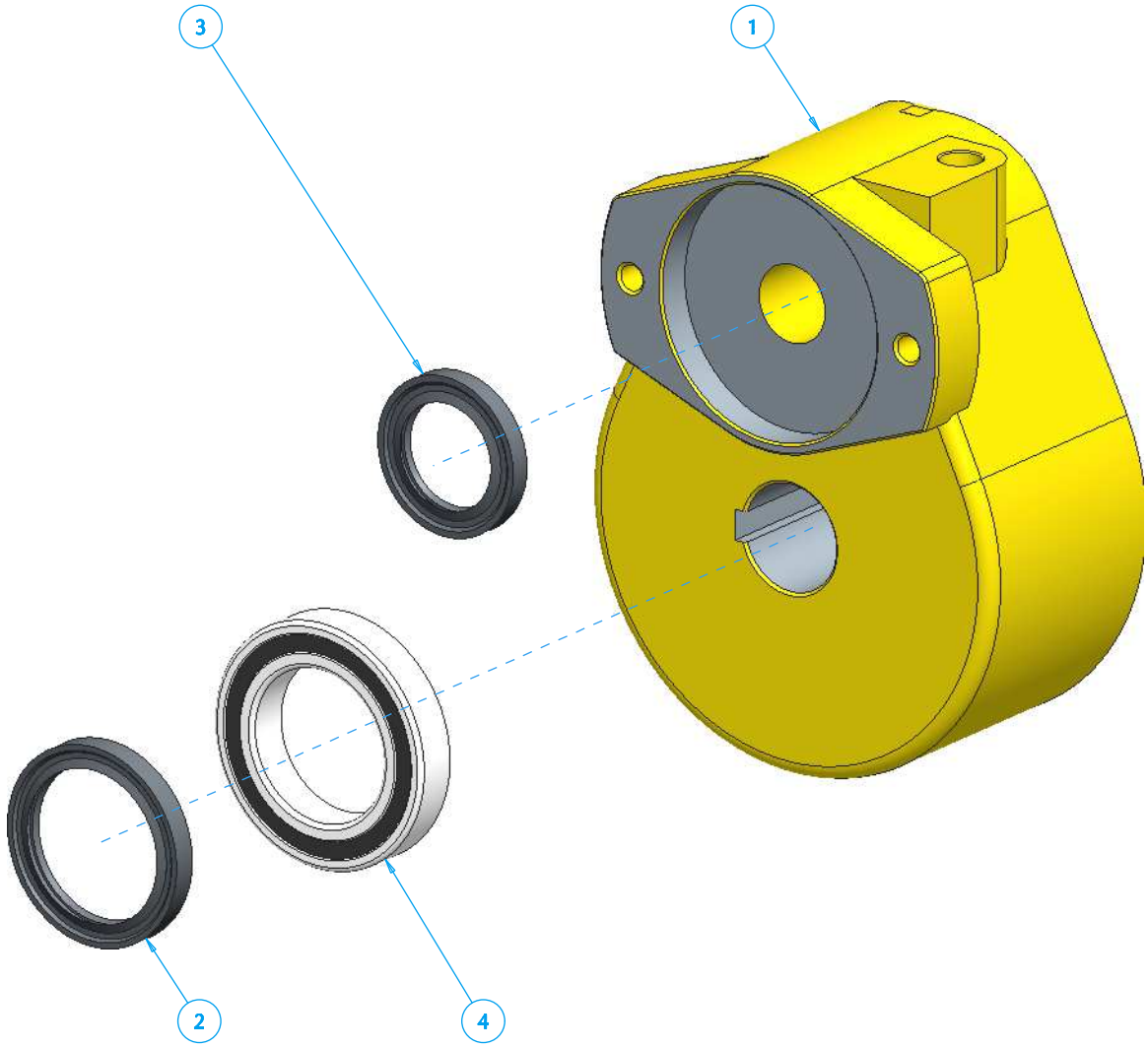
3
1
2
4

RT 1000

61_61_M

Ref	Code	Qt	*Descrizione*	*Description*	*Designation*	*Beschreibung*
1	61 61	1	Riduttore Nas	Belt reducer		
2	63 91	2	Paraolio 50x65x8	Oil seal 50x65x8		
3	63 92	1	CORTECO DIN 3760	CORTECO DIN 3760		
4	34 26	2	Cus ridutt nastro Ø50 80	Belt reducer pad Ø50 80		

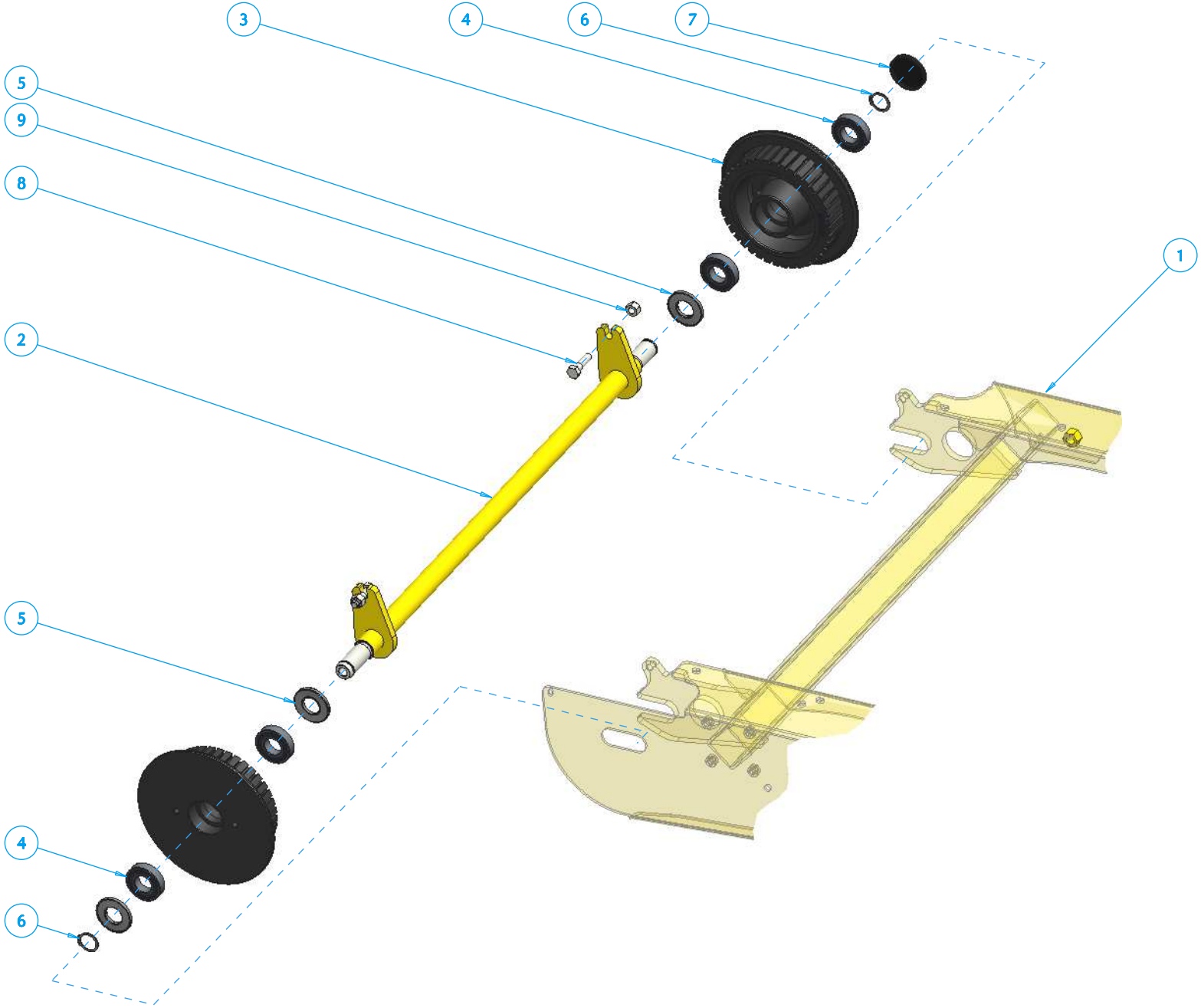
3
4
6
7
5
9
8
2
1
5
4
6

RT 1000 R13102-0000-M4

Ref	Code	Qt	*Descrizione*	*Description*	*Designation*	*Beschreibung*
1	61 72	1	Telaio nastro pick up x 3 m	Lat. frame pick-up for 3mt		
2	60 77	1	Albero tenditore nastro	Belt tightener shaft		
3	61 15	2	Puleggia tenditore nastro	Belt tightener pulley		
4	00 36	4	Cuscinetto -6206-2RS	Bearing -6206-2RS		
5	62 97	3	Protezione-SKF Z 206 F	SKF protection Z 206 F		
6	31 20	2	Seger i 30x1.5 UNI 7435	Seeger I 30x1.5 UNI 7435		
7	32 16	1	Paraolio chiuso AEC 62/8	Closed oil seal AEC 62/8		
8	26 14	2	Vite TE parz.fil.UNI5737	P. thread screw UNI5737		
9	02 90	2	Dado autobb. alto M12 7473	Self-locking nut M12 7473		

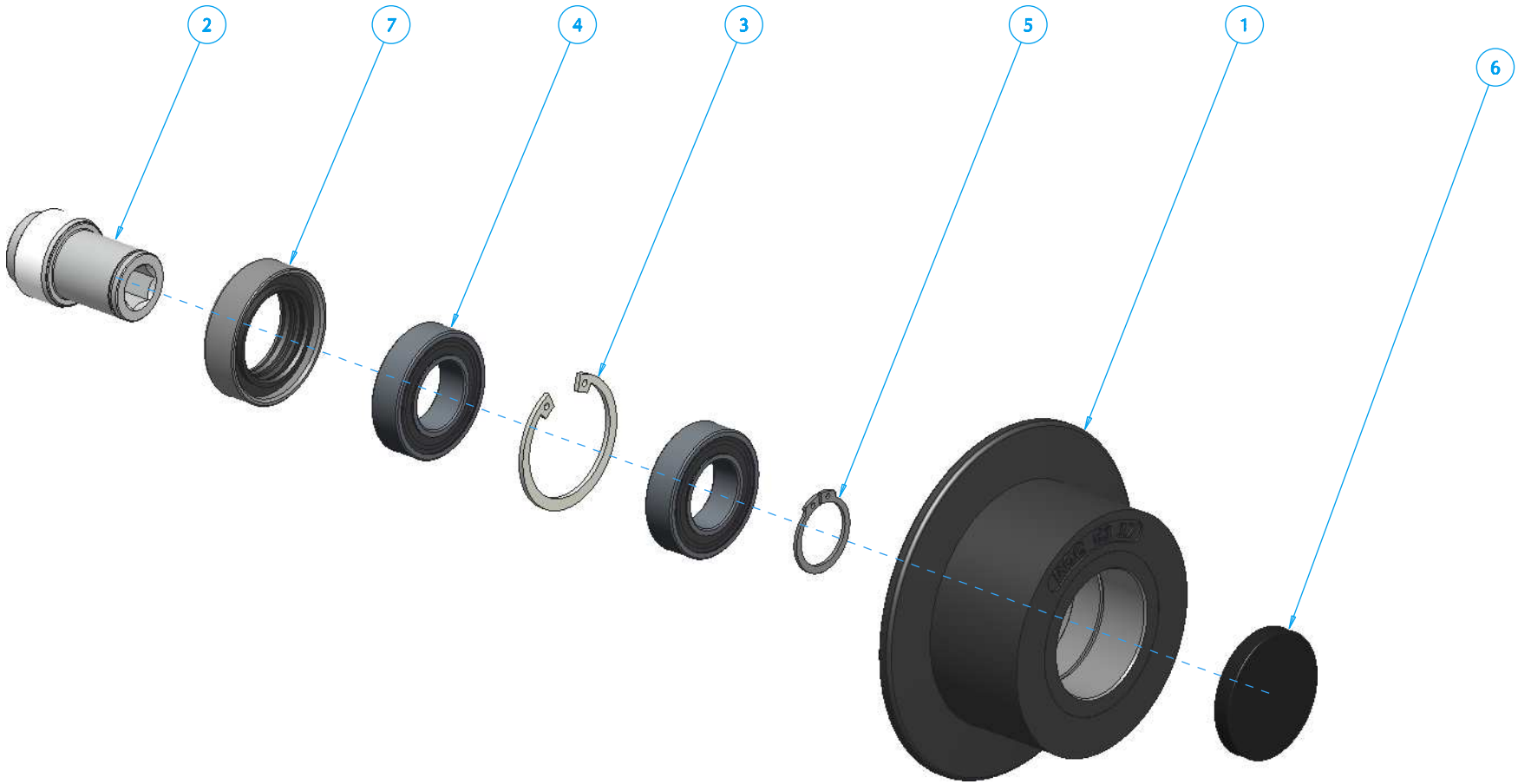
2
7
4
3
5
1
6

RT 1000 R13102-3200-M

Ref	Code	Qt	*Descrizione*	*Description*	*Designation*	*Beschreibung*
1		1	Rullo di appoggio con bordo	Supporting boarded rolling		
2		1	Perno filettato portarullo	Flanged roll holder pivot		
3	34 41	1	Seger e Ø 47 x 1.75 UNI	Seeger e Ø 47x1.75 UNI 7437		
4	61 93	2	Cuscinetto Ø25 6005-2RS	Bearing Ø25 6005-2RS		
5	32 18	1	Seger i Ø 25x1.2 UNI 7435	Seeger I Ø25x1.2 UNI 7435		
6	34 38	1	Paraolio chiuso AEC 47/7	Closed oil seal AEC 47/7		
7	34 39	1	Parailio speciale 32x50x14	Special oil seal 32x50x14		

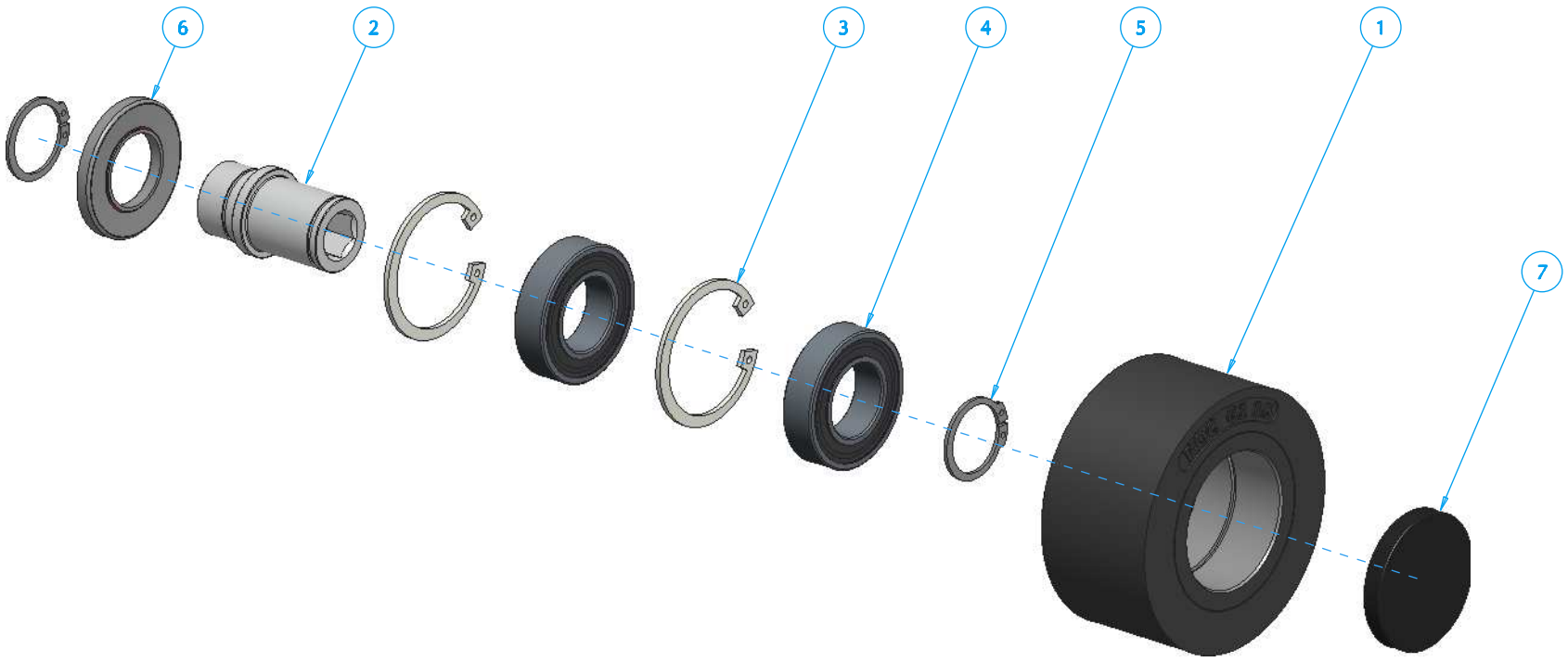
6
2
3
4
5
1
7

RT 1000 R13102-3300-M

Ref	Code	Qt	*Descrizione*	*Description*	*Designation*	*Beschreibung*
1		1	Rullo di appoggio senza bordo	Supp. rolling without border		
2		1	Perno filettato portarullo	Flanged roll holder pivot		
3	34 41	2	Seger e Ø 47 x 1.75 UNI 7437	Seeger e Ø 47x1.75 UNI 7437		
4	61 93	2	Cuscinetto Ø25 6005-2RS	Bearing Ø25 6005-2RS		
5	32 18	2	Seger i Ø 25x1.2 UNI 7435	Seeger I Ø25x1.2 UNI 7435		
6	62 96	1	Protezione-SKF Z 005 F	SKF protection Z 005 F		
7	34 38	1	Paraolio chiuso AEC 47/7	Closed oil seal AEC 47/7		

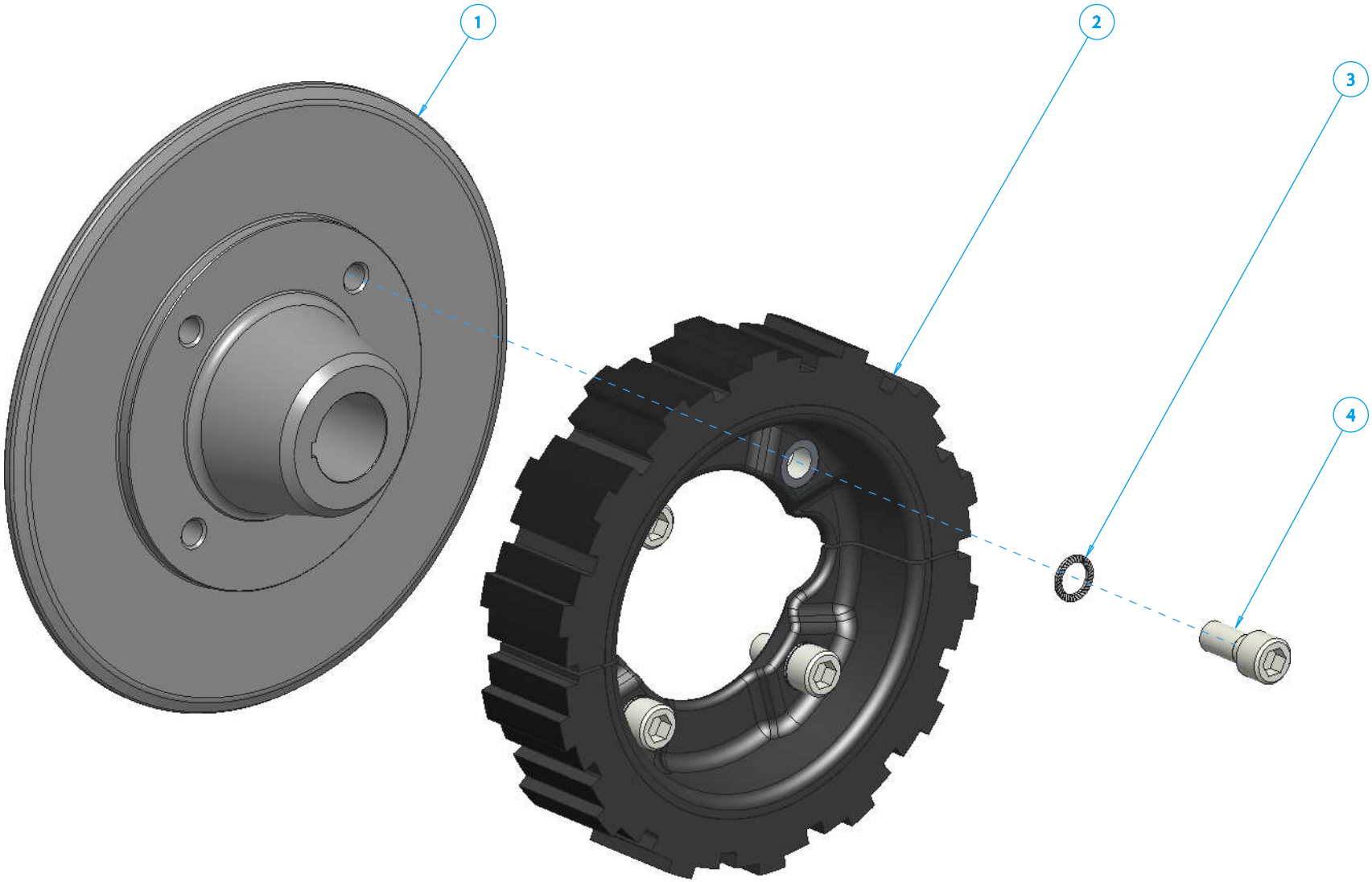
1
2
3
4

RT 1000

62 95-M

Ref	Code	Qt	*Descrizione*	*Description*	*Designation*	*Beschreibung*
1	65 02	1	Supporto puleggia motrice	Belt drive pulley support		
2	65 03	1	Puleggia motrice nastro (coppia	Belt drive pulley (couple)		
3	21 85	4	Rondella zigrinata Ø 12	Galvanized washer Ø 12		
4	29 50	4	Vite TCEI UNI5931 M12X25	Screw TCEI UNI5931 M12X25		

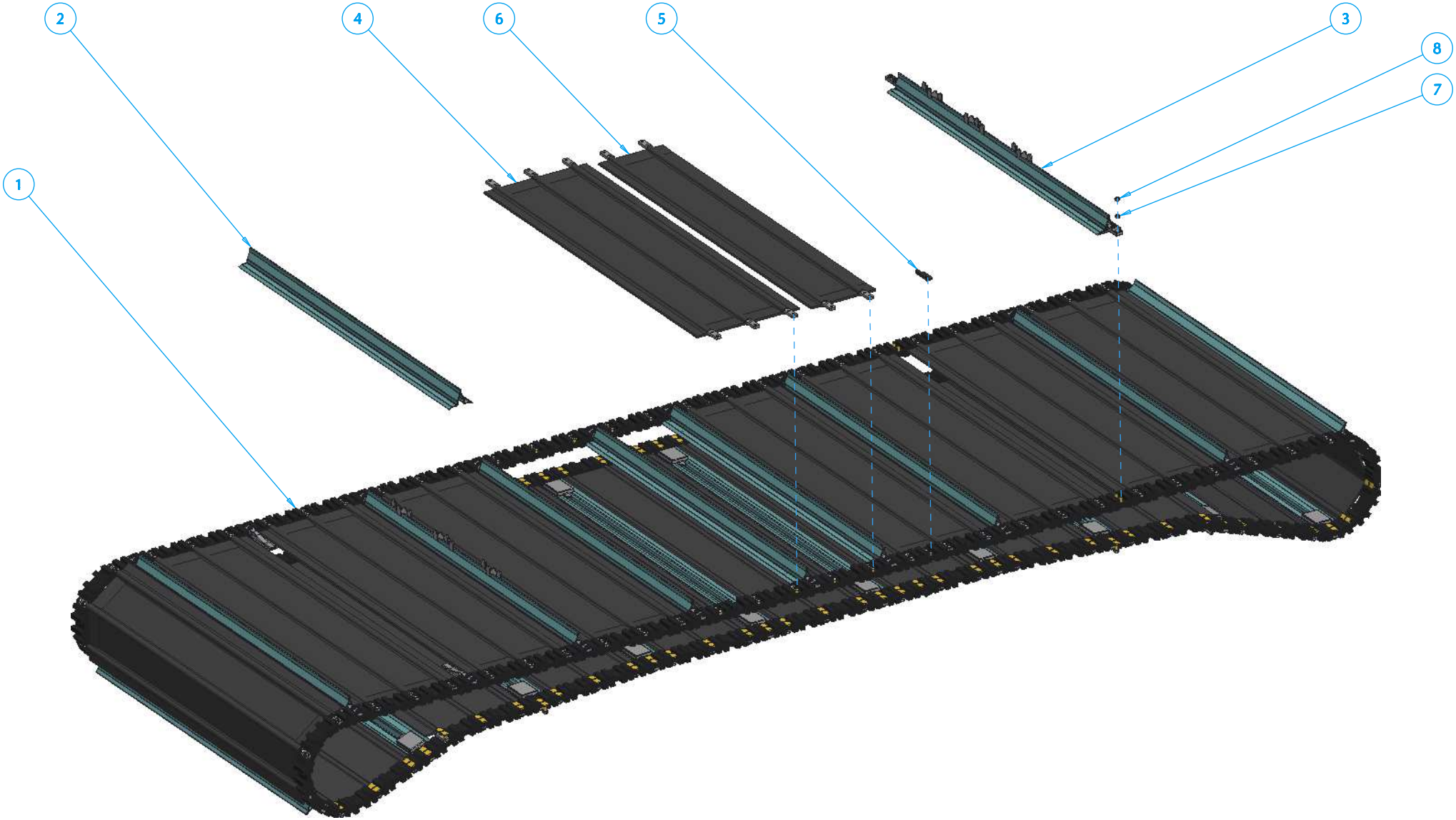
1
2
3
4
5
6
7
8

RT 1000 R13102-090B-M

Ref	Code	Qt	*Descrizione*	*Description*	*Designation*	*Beschreibung*
1	64 72	2	Cinghia per nastro lungo	Spare belt for long belt		
2	63 27	16	Facchino	Conveyor bar		
3	64 95	4	Facchino rialzato 3 man	Elev. 3fingers conveyor bar		
4	61 33	19	Botola tre aste	Trap door three bars		
5	63 01	4	Raschietto pulitore	Cleaning plate		
6	61 47	1	Botola due aste	Trap door two bars		
7	61 49	162	Piastrino con viti M6	Small plate with screws M6		
8	64 78	80	Dado M 6 conico x facc	Nut for conveyor bar M6		

RT 1000

ROC

R23300-0000-M

A-2

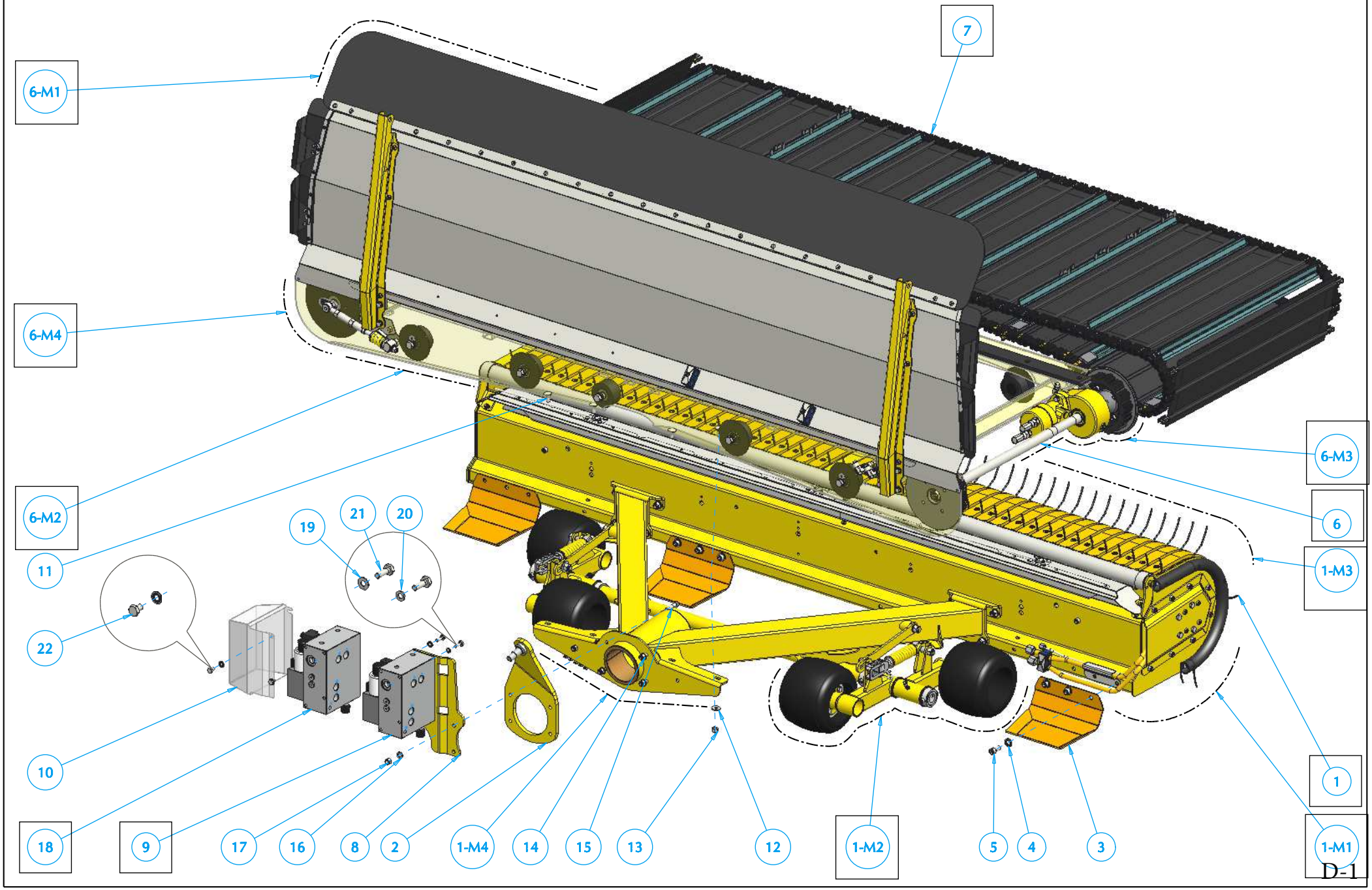

D-1

RT 1000

ROC

R23300-0000-M

Ref	Code	Qt	Descrizione	Description	Designation	Beschreibung
1	R13101-0000	1	Vedi pag. C-3	See page C-3		
2	63 26	1	Supp bilanciere lato sx	Left balance support		
3	60 64	3	Slitta/scarpetta	Skid		
4	30 43	6	Rondella Contact 14.4x30x2.4	Contact Washer 14.4x30x2.4		
5	26 24	6	Vite TCEI UNI5931 M14X30	Screw TCEI UNI 5931 M14X30		
6	R13102-0000	1	Vedi pag. C-41	See page C-41		
7	60 27	1	Nastro lungo RT *D-3	RT long belt *D-3		
8	66 07	1	Supporto blocco valvole SX	Left valves block support		
9	64 90	1	Blocco contr pick-up lat*F-61	Rot. control system *F-61		
10	67 70	1	Cofano copri valvole SX	Valves cover bonnet		
11	30 71	4	Vite quad. 12x30x8	Screw 12x30x8 square head		
12	30 70	4	Rondella piana 12.5x30x4	Washer 12.5x30x4		
13	02 90	4	Dado autobb. alto M12 7473	Self-locking M12 7473		
14	30 07	2	Vite TE UNI5738	Screw TE UNI 57389		
15	35 32	2	Vite TE UNI5738 M12X1.25X50	Screw TE UNI 57389		
16	24 62	4	Rosetta UNI 6592 13X24	Washer UNI 6592 13X24		
17	28 65	4	Dado autobb. alto 12 x 1.25	Self-locking nut 12X1.25		
18	69 35	1	Blocco contrpick-up lat *F-67	Rot. engine system *F-67		
19	35 36	4	Rondella Contact 10.2x22x1.6	Contact washer 10.2x22x1.6		
20	03 13	2	Rondella spaccata rinf. Ø 10	Split reinforced washer Ø10		
21	26 82	4	Vite TE UNI 5739 M10X30	Screw UNI 5739 M10X30		
22	23 00	2	VITE TE UNI 5739 M10X16	Screw TE UNI 5739 M10X16		

RT 1000

ROC

R13102-090A-M

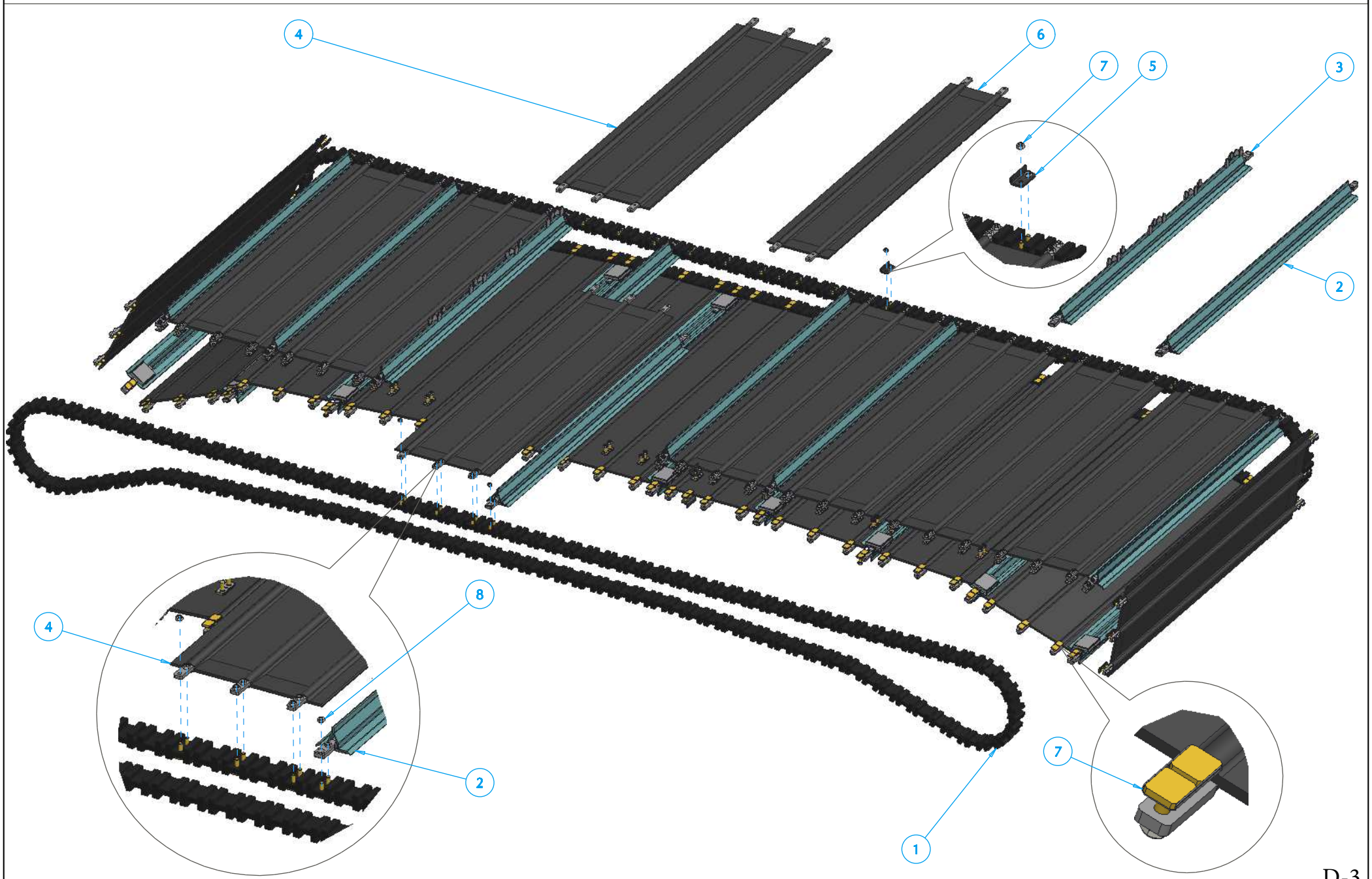

RT 1000

ROC

R13102-090A-M

Ref	Code	Qt	*Descrizione*	*Description*	*Designation*	*Beschreibung*
1	64 72	2	Cinghia per nastro lungo	Spare belt for long belt		
2	63 27	16	Facchino	Conveyor bar		
3	64 96	4	Facchino rialzato 4 man	Elevated 4fing. conveyor bar		
4	61 33	19	Botola tre aste	Trap door three bars		
5	63 01	4	Raschietto pulitore	Cleaning plate		
6	61 47	1	Botola due aste	Trap door two bars		
7	61 49	162	Piastrino con viti M6	Sm.plate with screws M6		
8	64 78	80	Dado M 6 conico x facch	Con. nut for conveyor bar M6		

RT 1000

ROC

R23100-0000-M

A-2

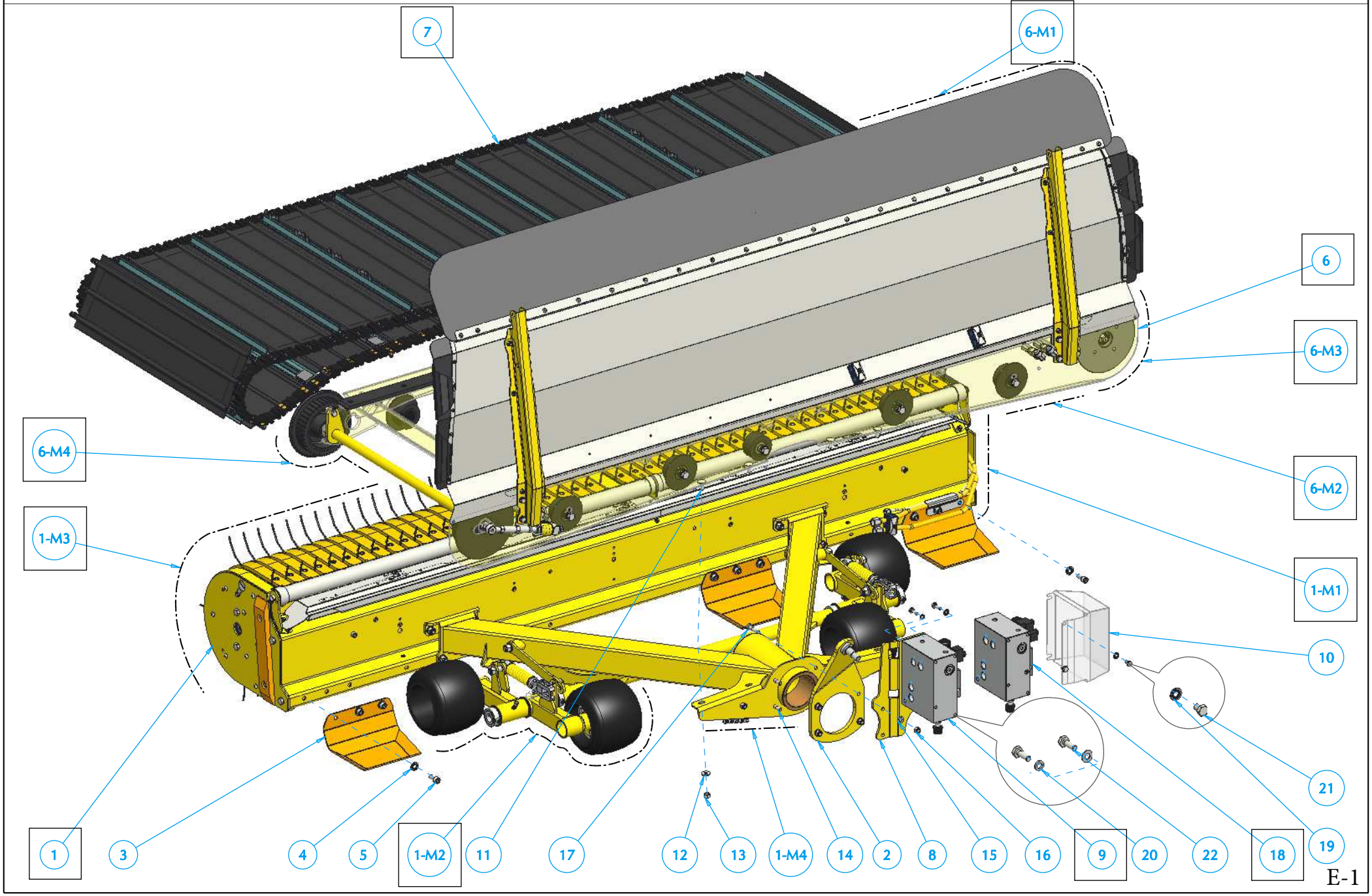

E-1

RT 1000

ROC

R23100-0000-M

Ref	Code	Qt	Descrizione	Description	Designation	Beschreibung
1	R13101-0000	1	Vedi pag. C-3	See page C-3		
2	60 59	1	Supporto per bilanc. lat. dx	Support for lateral balance		
3	60 64	3	Slitta/scarpetta	Skid		
4	30 43	9	Rondella Contact 14.4x30x2.4	Contact washer 14.4x30x2.4		
5	26 24	9	Vite TCEI UNI5931 M14X30	Screw TCEI UNI 5931 M14X30		
6	R13102-0000	1	Vedi pag. C-41	See page C-41		
7	60 27	1	Nastro lungo RT *D-3	RT long belt *D-3		
8	66 06	1	Supporto blocco valvole DX	Left valves-block support		
9	64 90	1	Blocco contrpickup lat *F-61	Rot.control system *F-61		
10	67 68	1	Cofano copri valvole DX	Valves-cover bonnet		
11	30 71	4	Vite quad. sotto testa12x30x8	Screw 12x30x8 square head		
12	30 70	4	Rondella piana 12.5x30x4	Washer 12.5x30x4		
13	02 90	4	Dado autobb. alto M12 7473	Self-locking nut M12 7473		
14	30 07	2	Vite TE UNI5738-	Screw TE UNI5738		
15	24 62	4	Rosetta UNI 6592 13X24	Washer UNI 6592 13x24		
16	28 65	4	Dado autobb. alto 12 x 1.25	Self-locking nut 12x1.25		
17	35 32	2	Vite TE UNI5738- M12X1.25X50	Screw TE UNI5738 - 312X1.25X50		
18	69 35	1	Blocco contrpickup lat *F-67	Rot engine system *F-67		
19	35 36	4	Rondella Contact 10.2x22x1.6	Contact washer 10.2x22x1.6		
20	03 13	2	Rondella spaccata rinf. Ø 10	Reinforced split washer Ø10		
21	23 00	2	VITE TE UNI 5739 M10X16	Screw TE UNI 5739 M10X16		
22	26 82	4	Vite TE .UNI 5739 M10X30	Thr.screw UNI5739 M10x30		

RT 1000

ROC

R16000-0000_M1

A-4

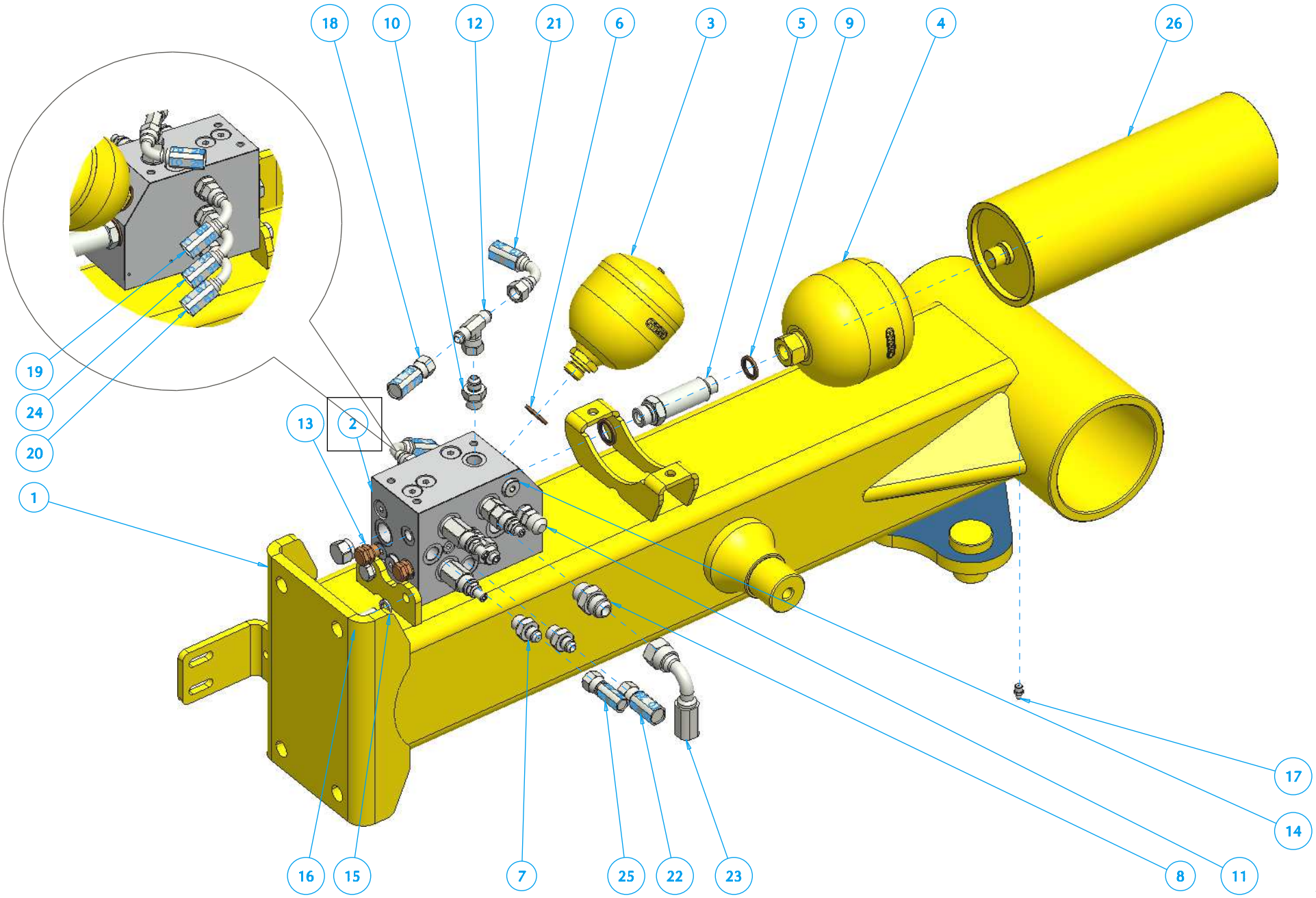

F-1

RT 1000

ROC

R16000-0000_M1

Ref	Code	Qt	Descrizione	Description	Designation	Beschreibung
1	60 93	1	Braccio laterale interno SX	Left lateral inner arm		
2	68 08	1	Sist valvole lat SX *F-59	Left lateral valves syst *F-59		
3	04 43	1	Accumulatore 0,5LT	Accumulator 0,5LT		
4	67 54	1	Accumulatore da 0.75 litro	Accumulator 0.75LT		
5	35 67	1	Colonnetta 1/2 gas - 18x1.5	Stud 1/2 gas - 18x1.5		
6	19 02	2	Bonder 1/2 gas	Washer bonder 1/2 gas		
7	61 02	1	Niples speciale 3/8 gas	Nipples 3/8 gas 9/16 J		
8	03 02	1	Niples 1/2 gas 7/8 J	Nipples 1/2 gas 7/8J		
9	19 43	1	Bonder d. 18x1,5	Washer bonder d. 18x1.5		
10	18 50	5	Niples 3/8 gas 9/16 J	Nipples 3/8 gas 9/16 J		
11	61 28	1	Prova pressione 1/4 gas	Pressure test 1/4 gas		
12	31 47	1	Raccordo a T Mas 9/16	T fitting M 9/16 J		
13	60 25	2	Tappo sfiato da 1/4 gas	Vent. valve 1/4 gas		
14	31 53	1	Tappo con esag. incassato	Drain plug 1/4 gas		
15	03 13	2	Rondella spaccata rinf. Ø 10	Reinf.split washer Ø 10		
16	26 81	2	Vite TE int.fil.UNI 5739	Screw TE int. fil. UNI 5739		
17	30 54	1	Ingrassatore 8x1 dritto	Straight greaser 8x1		
18	T1 73	1	Tubo R2 3/8	Hose R2 3/8		
19	T1 69	1	Tubo R2 3/8	Hose R2 3/8		
20	T1 67	1	Tubo R2 3/8	Hose R2 3/8		
21	T0 26	1	Vedi tubo T0_26	Hose R2 3/8		
22	T0 29	1	Tubo R2 3/8	See hose T0_26		
23	T0 31	1	Vedi tubo T0_31	Hose R2 3/8		
24	T0 34	1	Vedi tubo T0_34	See hose T0_31		
25	T0 64	1	Vedi tubo T0_64	See hose T0_34		
26	62 30	1	Accumulatore HP 1.0	Accumulator HP 1.0		

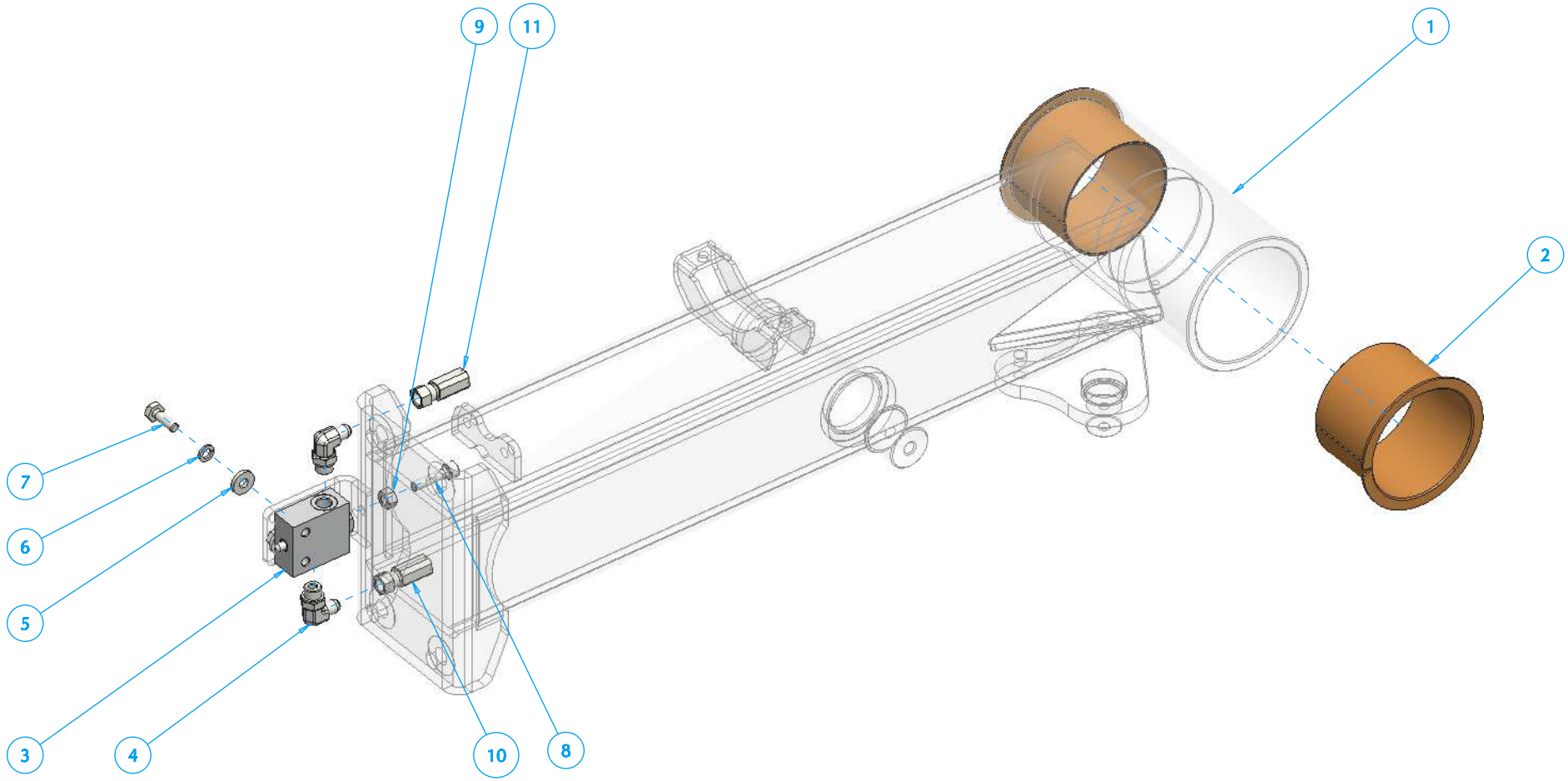
9
11
1
2
7
6
5
3
4
10
8

RT 1000 R16000-0000-M2

Ref	Code	Qt	*Descrizione*	*Description*	*Designation*	*Beschreibung*
1	60 93	1	Braccio laterale interno SX	Left lateral inner arm		
2	61 98	2	Boccola 120x125-145x90	Bronze bushing 120x125-145x90		
3	61 48	1	Valvola a pulsante 3/8 Gas	Switch limit valve 3/8 gas		
4	32 40	2	Curva 90° orient. 3/8 gas	Nicked nut 20x1.5		
5	30 44	2	Rondella piana 10.5x25x4	Washer 1035x25x4		
6	03 13	2	Rondella spaccata rinf. Ø 10	Reinforced split washer Ø10		
7	26 82	2	VITE TE INT.FIL.UNI 5739	Screw UNI 5739 M10X30		
8	25 14	1	Vite TCEI UNI5931 M10X40	Screw TCEI UNI5931 M10X40		
9	02 97	1	Dado esag. alto UNI 5587	High hex nut UNI 5587 M10		
10	T1 72	1	Tubo Hiflex 241G-06 3/8	Hi-flex hose 241G-06 3/8		
11	T0 26	1	Tubo R2 3/8	Hose R2 3/8		

RT 1000

ROC

R16000-0000_M3

A-4

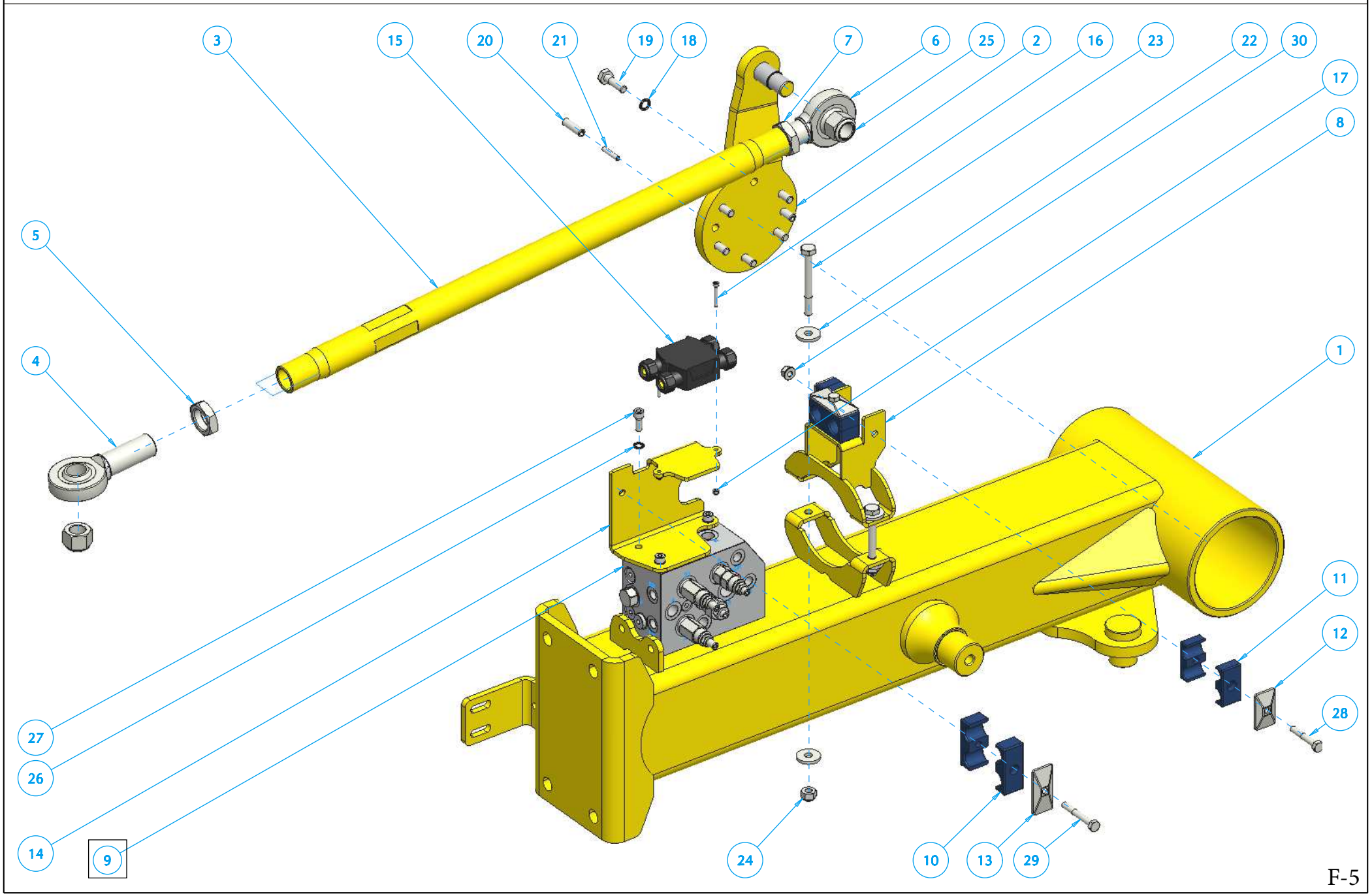

F-5

RT 1000

ROC

R16000-0000_M3

Ref	Code	Qt	Descrizione	Description	Designation	Beschreibung
1	60 93	1	Braccio laterale interno SX	Left lateral inner arm		
2	64 31	1	Supporto braccio rinvio	Arm support for postp.		
3	60 11	1	Tirante laterale interno	Inner lateral tie-rod		
4	60 48	1	Terminale filettato destro Ø 25	Right joint end Ø25		
5	30 67	1	Dado speciale 30x2 dx	Right Nut 30x2		
6	60 49	1	Terminale filettato sinistro Ø 25	Left joint end Ø25		
7	30 68	1	Dado speciale 30x2 sx	Left nut 30x2		
8	60 83	1	Staffa portaccumulatore portatubi	Bracket holder		
9	68 08	1	Sist valvole SX *F-59	LEFT valves system *F-59		
10	32 05	4	Fermatubo doppio Ø 20	Double tube-holder Ø20		
11	31 16	4	CF 2 diam.17.2	CF Ø17.2		
12	31 18	2	Piastra x ferma tubo CF2 30x51	Plate for pipe clip CF 2		
13	32 06	2	Piastra x ferma tubo CF3 30x64	Plate for tube-blocking CF3		
14	66 09	1	Supporto tubi e scatola elett	Hoses and el.box supp.		
15	65 97	1	Scatola di derivazione laterale	Lateral by-pass box		
16	21 31	2	Vite TCEI UNI5931 M4X30	Screw TCEI UNI 59312 M4X30		
17	21 32	2	Dado autobb. basso M 4 7474	Self-locking nut M 4 7474		
18	29 38	6	Rondella zigrinata Ø 10	Knurled washer Ø10		
19	31 29	6	Vite TE parz.fil.UNI5737 M10X35	Screw UNI 5737 M10X35-10.9		
20	31 23	2	Spina elastica Ø 10x35	Elastic pin Ø10x35		
21	31 22	2	Spina elastica Ø 6x30	Elastic pin Ø6x30		
22	30 45	4	Rondella piana 10.5x30x4	Washer 10.50x30x4		
23	26 90	2	Vite TE parz.fil.UNI5737 M10X90	Screw UNI 5737 M10X90		
24	02 34	2	Dado autobb. alto M10 7473	Self-locking nut M10 7476		
25	30 41	2	Dado autobb. alto M22 7473	Self-locking nut M22 7473		
26	22 07	3	Rondella zigrinata Ø 8	Knurled washer Ø 8		
27	25 69	3	Vite TCEI UNI5931 M8X20	Screw TCEI UNI 5931 M8X20		
28	23 28	2	Vite TE parz.fil.UNI5737 M8X50	Screw TE UNI 5737 M8X50		
29	23 30	2	Vite TE parz.fil.UNI5737 M8X60	Screw TE UNI 5737 M8X60		
30	16 98	4	Dado autobb. flangiato 8 6926	Fl.self-locking nut 8 6926		

RT 1000

ROC

R16000-0000_M4

A-4

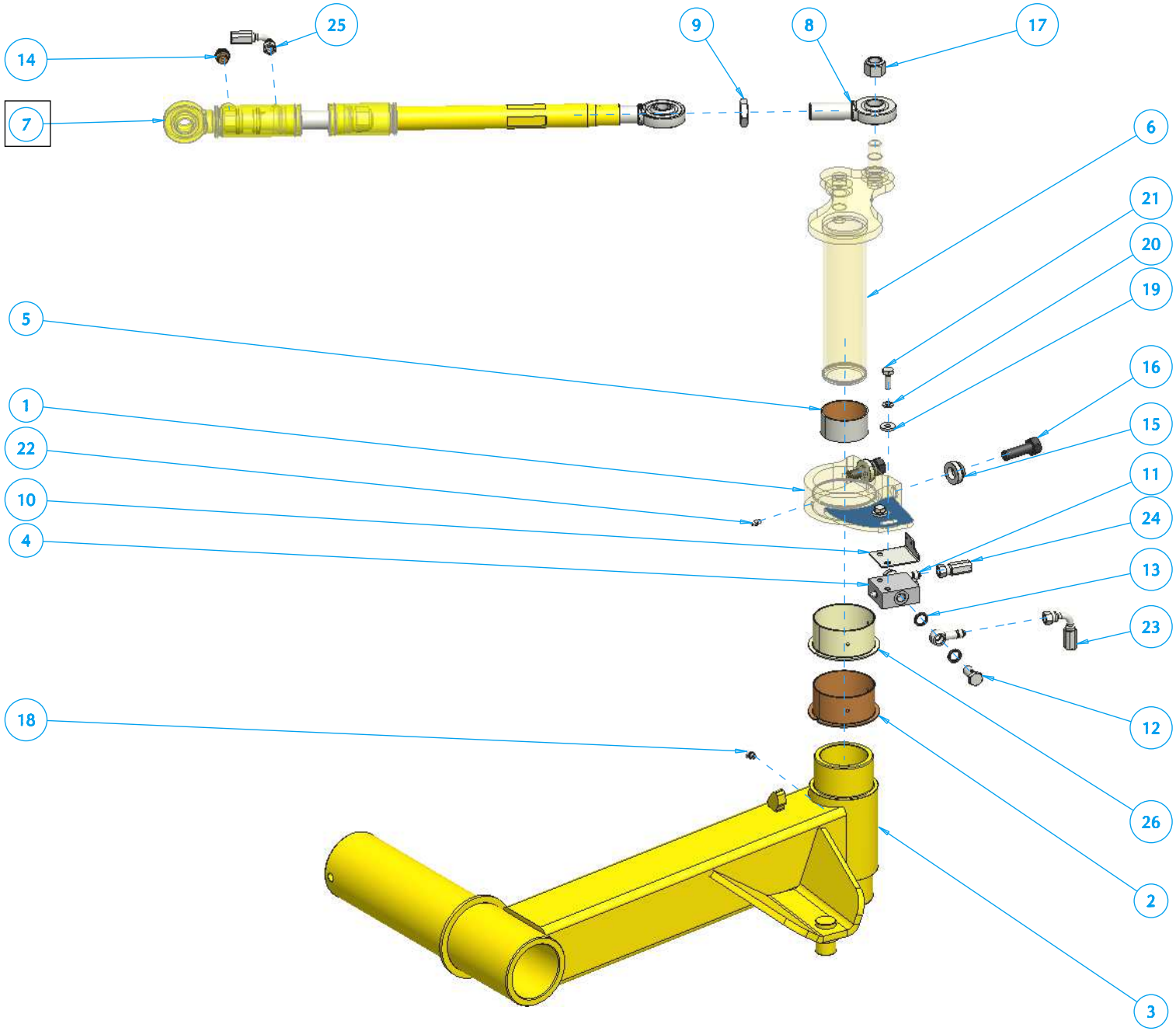

F-7

RT 1000

ROC

R16000-0000_M4

Ref	Code	Qt	Descrizione	Description	Designation	Beschreibung
1	62 90	1	Supporto omega superiore sx	Omega LEFT upper supp.		
2	61 99	1	Boccola 100x105-120x52.5	Bushing 100x105-120x52.5		
3	60 80	1	Braccio laterale SX esterno	Left external lateral arm		
4	61 48	1	Valvola a pulsante 3/8 Gas	Switch limit valve 3/8 gas		
5	62 00	1	Boccola 75x40 rinvio laterale	Bushing 75x40 lat.countershaft		
6	60 70	1	Rinvio laterale SX	Left lateral countershaft		
7	62 85	1	Cil bilanciam. laterale *F-73	Short balance cylinder *F-73		
8	60 48	1	Terminale filettato destro Ø 25	Bright ball joint end Ø25		
9	30 67	1	Dado speciale 30x2 dx	Right Nut 30x2		
10	65 12	1	Supp. interrutore fine corsa sx	Switch limit left support		
11	61 08	2	Occhio 3/8″ gas con gambo 9/16″	Eye 3/8″ gas 9/16″ J		
12	04 27	2	Perno forato 3/8 gas	Pierced pin 3/8 gas		
13	31 59	4	Bonder 3/8 gas	Bonder 3/8 gas		
14	01 65	1	Tappo sfiato da 3/8 gas	Ventilation valve 3/8 gas		
15	62 75	2	Distanziale per vite Ø 18	Spacer for omega screw Ø18		
16	35 01	2	Vite 18x55 speciale 12.9	Special 18x55 screw 12.9		
17	30 41	1	Dado autobb. alto M22 7473	Self-locking nut M22 7473		
18	31 25	1	Ingrassatore 8x1 45°	Greasing device 8x1 45°		
19	30 44	2	Rondella piana 10.5x25x4	Washer 1035x25x4		
20	03 13	2	Rondella spaccata rinf. Ø 10	Reinforced split washer Ø 10		
21	26 82	2	Vite TE int.fil.UNI 5739	Threaded screw UNI5739 M10x30		
22	30 54	1	Ingrassatore 8x1 dritto	Straight greaser 8x1		
23	T1 71	1	Tubo R2 3/8	Hose R2 3/8		
24	T0 29	1	Vedi tubo T0_29	See hose T0_29		
25	T1 73	1	Vedi tubo T1_73	See hose T1_73		
26	69 39	1	Boccola 100x105-120x52.5 Plast	Bushing 100x105-120x52.5		

RT 1000

ROC

R16000-0000-M5

A-4

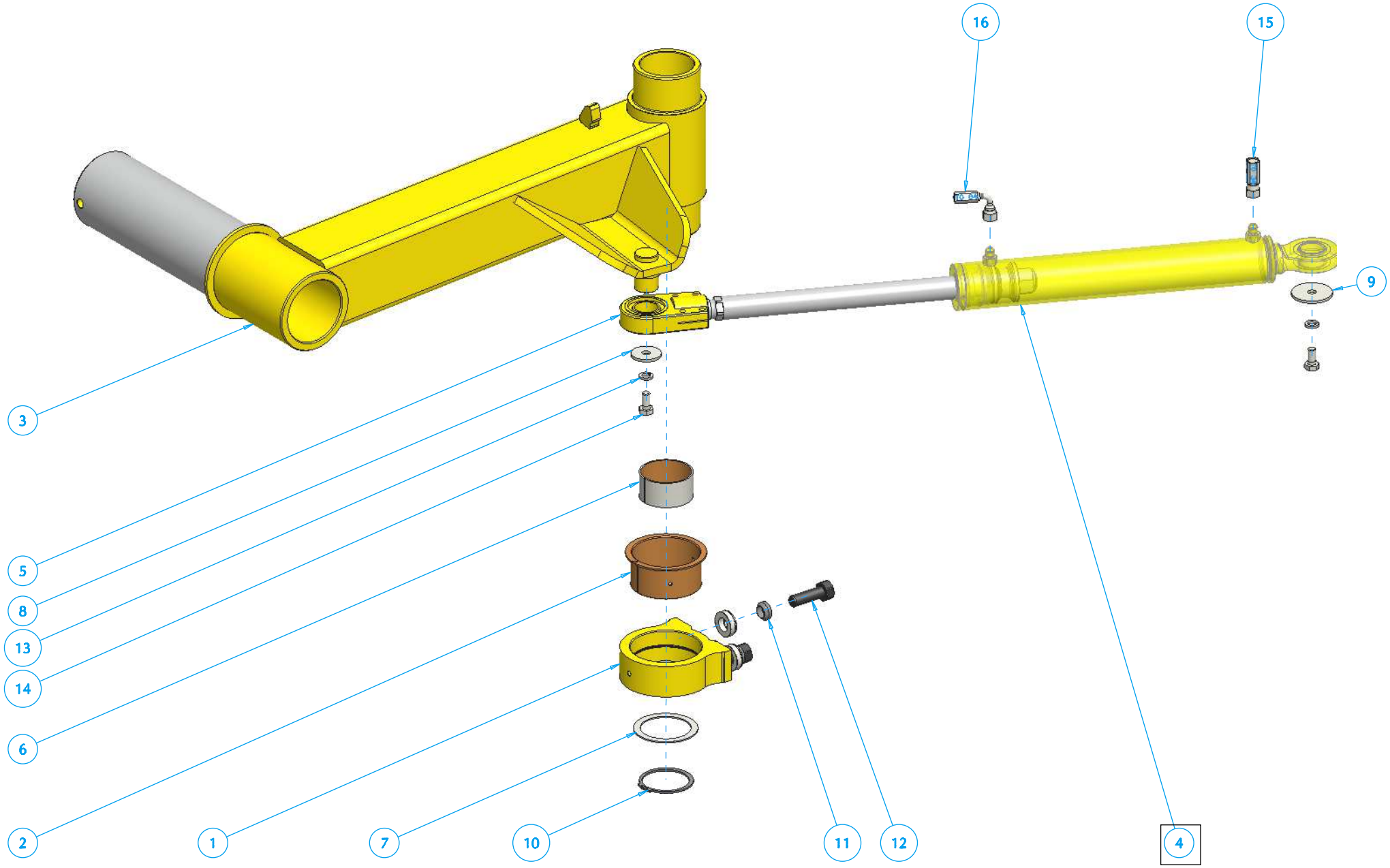

RT 1000 R16000-0000-M5

Ref	Code	Qt	Descrizione	Description	Designation	Beschreibung
1	62 89	1	Supporto omega inferiore	Lower omega support		
2	61 99	1	Boccola 100x105-120x52.5	Bushing 100x105-120x52.5		
3	60 80	1	Braccio laterale SX esterno	Left external lateral arm		
4	60 32	1	Cilindro apertura laterale *F-5	LAT open cylinder *F-5		
5	60 46	1	Terminale filettato Ø 30	Ball joint end Ø30		
6	62 00	1	Boccola 75x40 rinvio lat	Bushing75x40lat.countershaft		
7	63 66	1	Anello di rasamento	Thrust washer		
8	63 75	1	Rondella 12,5x45x4	Washer 12.5x45x4		
9	63 76	1	Rondella 12,5x61x4	Washer 12.5x61x4		
10	31 21	1	Seger i 75x2.5 UNI 7435	Seger I 75x2.5 UNI7435		
11	62 75	2	Distanziale per vite Ø 18	Spacer for omega screw Ø18		
12	35 01	2	Vite 18x55 speciale 12.9	Special 18x55 screw 12.9		
13	26 06	2	Rondella spaccata rinf. Ø 12	Reinforced split washer Ø12		
14	26 09	2	Vite TE int.fil.UNI 5739	Screw TE int. fil. UNI 5739		
15	T0 34	1	Tubo R2 2/8	Hose R2 2/8		
16	T0 64	1	Tubo R2 1/4	Hose R2 1/4		

RT 1000

ROC

R16000-0000_M6

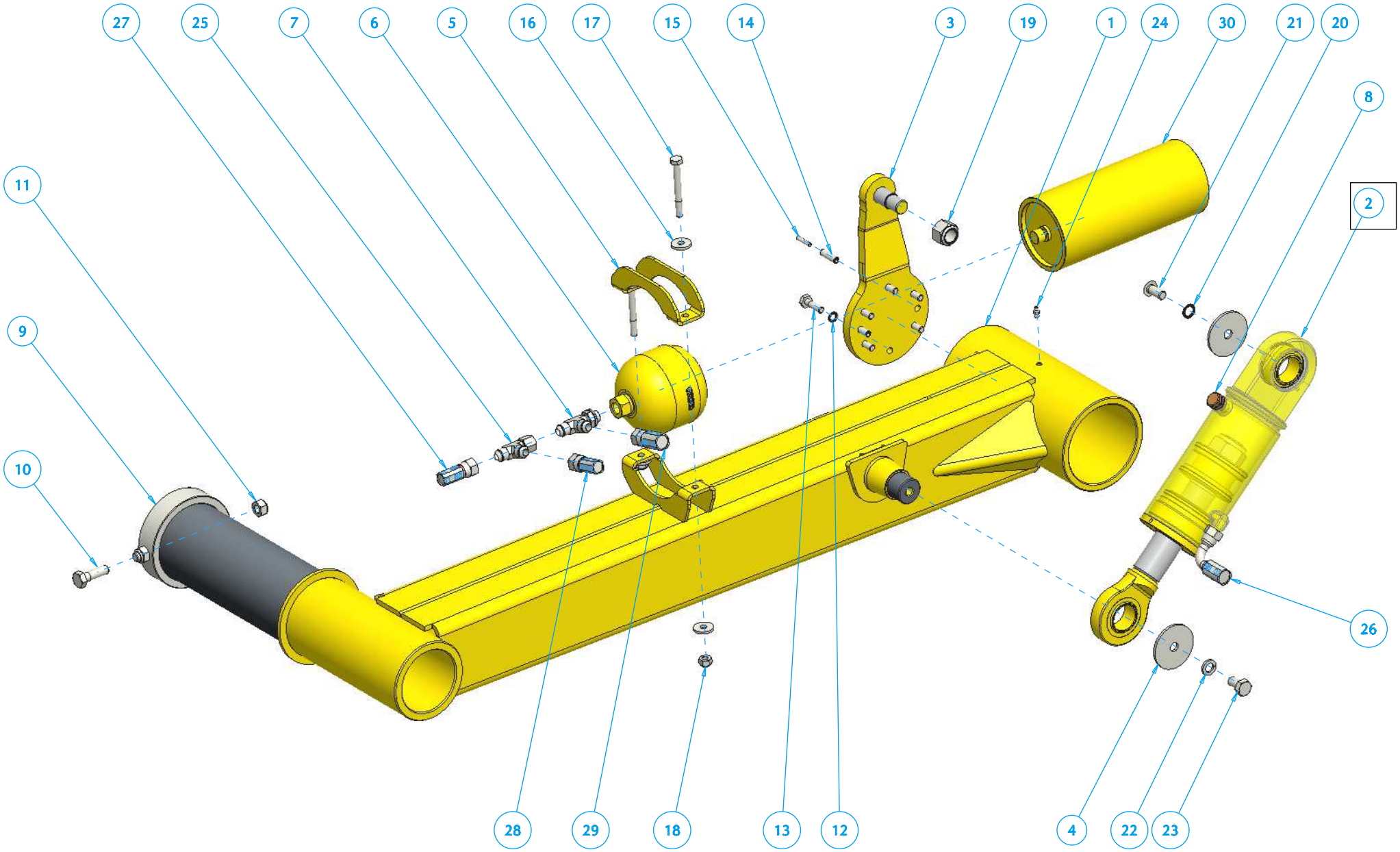

RT 1000

ROC

R16000-0000_M6

Ref	Code	Qt	Descrizione	Description	Designation	Beschreibung
1	66 27	1	Bracc. sosp. centrale.	Centr.RIGHT suspension arm		
2	68 00	1	Cilindro sosp. centr *F-81	Cyl. LATERAL susp. *F-81		
3	64 31	1	Supporto braccio rinvio	Arm support for postp.		
4	63 73	2	Rondella 14,5x70x4	Washer 14.5x70x4		
5	60 84	1	Staffa ferma accumulatore	Accumulator bracket		
6	67 54	1	Accumulatore da 0.75 litro	Accumulator 0.75LT		
7	01 55	1	Orientabile 18 x 1.5	Joint 18x1.5		
8	01 65	1	Tappo sfiato da 3/8 gas	Ventilation valve 3/8 gas		
9	60 16	1	Anello di fissaggio Ø120	Fixing ring Ø120		
10	22 47	2	Vite TE parz.fil.UNI5737	Screw UNI 5737		
11	23 35	2	Dado autobb. basso M14	Self-locking nut M14		
12	29 38	6	Rondella zigrinata Ø 10	Knurled washer Ø10		
13	31 29	6	Vite TE parz.fil.UNI5737	Screw UNI 5737		
14	31 23	2	Spina elastica Ø 10x35	Elastic pin Ø10x35		
15	31 22	2	Spina elastica Ø 6x30	Elastic pin Ø6x30		
16	30 45	4	Rondella piana 10.5x30x4	Washer 10.50x30x4		
17	26 90	2	Vite TE parz.fil.UNI5737	Screw UNI 5737 M10X90		
18	02 34	2	Dado autobb. alto M10	Self-locking nut M10		
19	30 41	1	Dado autobb. alto M22	Self-locking nut M22		
20	30 37	1	Rondella zigrinata Ø 14	Galvanized washer Ø 14		
21	22 86	1	Vite TBEI UNI ISO 7380	Screw UNI ISO 7380 M14X30		
22	05 52	1	Rondella spaccata rinf. Ø 14	Split reinf. washer Ø 14		
23	19 45	1	Vite TE int.fil.UNI 5739	Screw UNI 5739		
24	30 54	1	Ingrassatore 8x1 dritto	Straight greaser 8x1		
25	31 70	1	Racc. a T f. 3/4J M.3/4	T joint F:3/4J M:3/4J		
26	T0 95	1	Tubo R2 1/2	Hose R2 1/2		
27	T0 66	1	Tubo R2 3/8	Hose R2 3/8		
28	T0 47	1	Tubo R2 3/8	Hose R2 3/8		
29	T0 95	1	Vedi tubo T0_95	See hose T0 95		
30	60 54	1	Accumulatore HP 0.65	Accumulator HP 0.65		

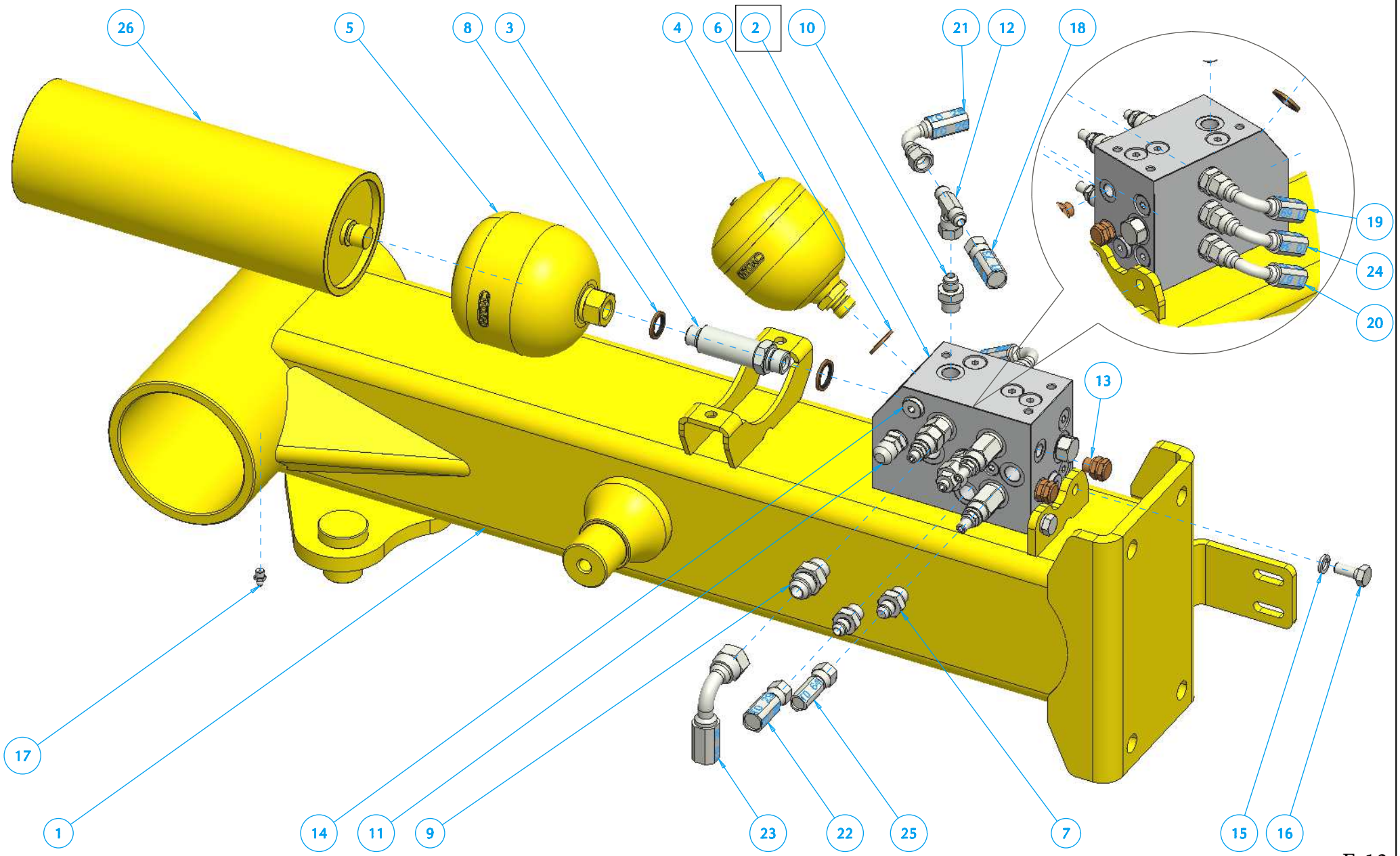
26
5
8
3
4
6
2
10
21
12
18
19
24
20
13
17
1
14
11
9
23
22
25
7
15
16

RT 1000

ROC

R16000-0000_M7

Ref	Code	Qt	Descrizione	Description	Designation	Beschreibung
1	60 94	1	Braccio laterale int DX	RIGHT int. lateral arm		
2	68 07	1	Sistema valvole lat DX*F-57	RIGHT lat. val. syst.*F-57		
3	35 67	1	Colonnetta 1/2 gas	Stud 1/2 gas		
4	04 43	1	Accumulatore 0.5LT	Accumulator 0,5LT		
5	67 54	1	Accumulatore 0.75 litr	Accumulator 0.75LT		
6	19 02	2	Bonder 1/2 gas	Washer bonder 1/2 gas		
7	61 02	1	Niples speciale 3/8 gas	Niples 3/8 gas		
8	19 43	1	Bonder d. 18x1,5	Washer bonder d. 18x1.5		
9	03 02	1	Niples 1/2 gas 7/8 J	Nipples 1/2 gas 7/8J		
10	18 50	5	Niples 3/8 gas 9/16 J	Nipples 3/8 gas 9/16 J		
11	61 28	1	Prova pressione 1/4 gas	Pressure test 1/4 gas		
12	31 47	1	Raccordo a T Mas 9/16	T-joint 9/16		
13	60 25	2	Tappo sfiato da 1/4 gas	Ventilation valve 1/4 gas		
14	31 53	1	Tappo con esag.	Drain plug 1/4 gas		
15	03 13	2	Rondella spaccata rinf. Ø 10	Reinf. split washer Ø 10		
16	26 81	2	Vite TE int.fil.UNI 5739	Screw TE UNI 5739		
17	30 54	1	Ingrassatore 8x1 dritto	Straight greaser 8x1		
18	T1 73	1	Tubo R2 3/8	Hose R2 3/8		
19	T1 69	1	Tubo R2 3/8	Hose R2 3/8		
20	T1 67	1	Tubo R2 3/8	Hose R2 3/8		
21	T0 26	1	Vedi tubo T0_26	See hose T0_26		
22	T0 29	1	Tubo R2 3/8	Hose R2 3/8		
23	T0 31	1	Vedi tubo T0_31	See hose T0_31		
24	T0 34	1	Vedi tubo T0_34	See hose T0_34		
25	T0 64	1	Vedi tubo T0_64	See hose T0_64		
26	62 30	1	Accumulatore HP 1.0	Accumulator HP 1.0		

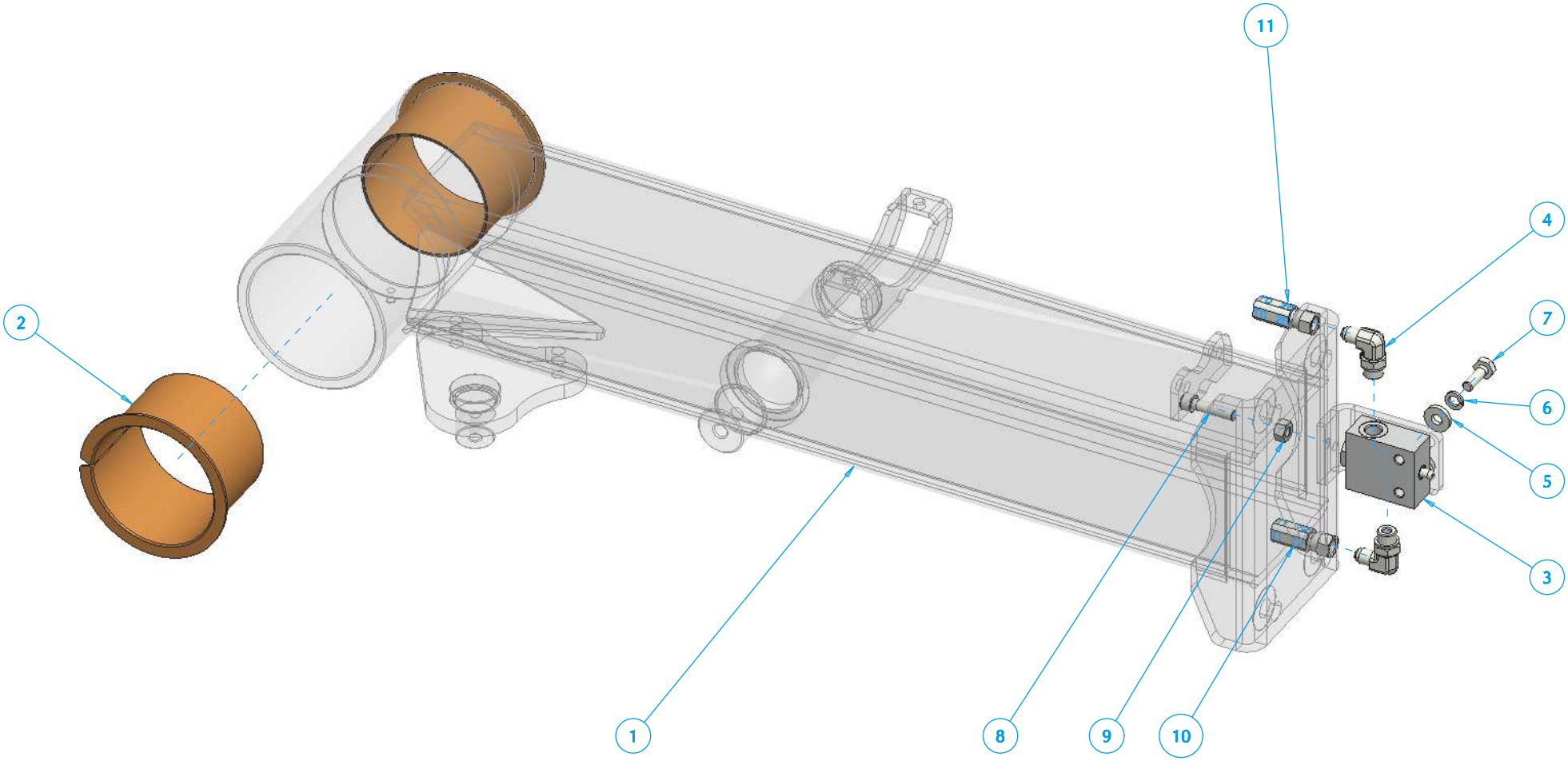
11
4
7
6
5
3
2
1
8
9
10

RT 1000 R16000-0000-M8

Ref	Code	Qt	*Descrizione*	*Description*	*Designation*	*Beschreibung*
1	60 94	1	Braccio laterale interno DX	RIGHT int. lateral arm		
2	61 98	2	Boccola 120x125-145x90	Bushing 120x125-145x90		
3	61 48	1	Valvola a pulsante 3/8 Gas	Sw.limit valve 3/8 gas		
4	32 40	2	Curva 90° orient. 3/8 gas	Nicked nut 20x1.5		
5	30 44	2	Rondella piana 10.5x25x4	Washer 1035x25x4		
6	03 13	2	Rondella spaccata rinf. Ø 10	Reinf.split washer Ø 10		
7	26 82	2	Vite TE int.fil.UNI 5739	Thr.screw UNI5739		
8	25 14	1	Vite TCEI UNI5931 M10X40	Screw TCEI UNI5931 M10X40		
9	02 97	1	Dado esag. alto UNI 5587 M	High hex nut UNI 5587 M		
10	T1 72	1	Tubo Hiflex 241G-06 3/8	Hi-flex hose 241G-06 3/8		
11	T0 26	1	Tubo R2 3/8	Hose R2 3/8		

RT 1000

ROC

R16000-0000_M9

A-4

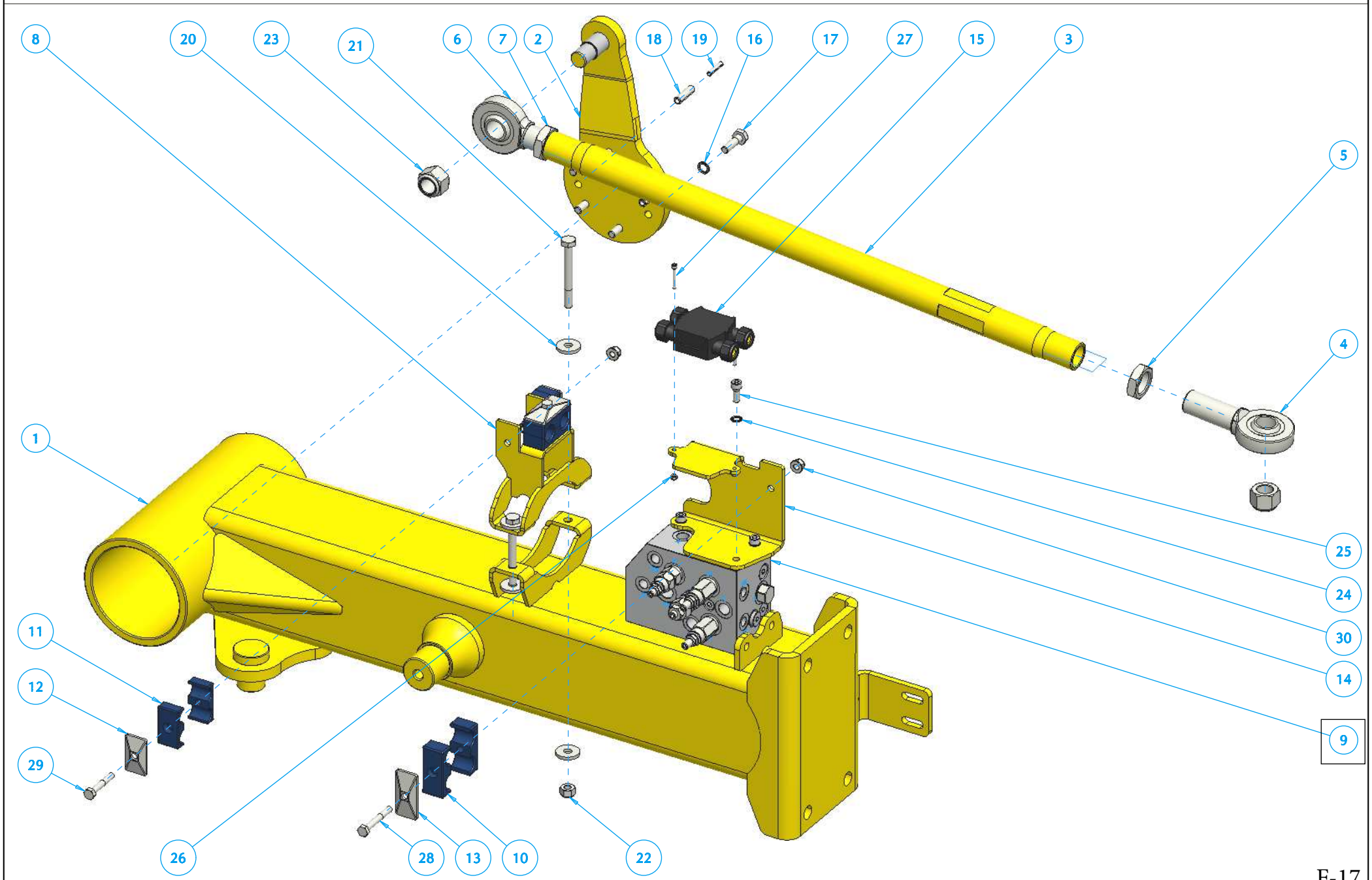

F-17

RT 1000

ROC

R16000-0000_M9

Ref	Code	Qt	Descrizione	Description	Designation	Beschreibung
1	60 94	1	Braccio laterale interno DX	RIGHT int. lateral arm		
2	64 31	1	Supporto braccio rinvio	Arm support for postp.		
3	60 11	1	Tirante laterale int	Inner lateral tie-rod		
4	60 48	1	Terminale filettato DX Ø 25	Bright ball joint end Ø25		
5	30 67	1	Dado speciale 30x2 dx	Right Nut 30x2		
6	60 49	1	Terminale filettato SX Ø 25	Left joint end Ø25		
7	30 68	1	Dado speciale 30x2 sx	Left nut 30x2		
8	60 83	1	Staffa portacc portatubi	Bracket holder		
9	68 07	1	Sistema valvole lat DX *F-57	RIGHT valves syst. *F-57		
10	32 05	4	Fermatubo doppio Ø 20	Double tube-holder Ø20		
11	31 16	4	CF 2 diam.17.2	CF Ø17.2		
12	31 18	2	Piastra x ferma tubo CF2	Plate for pipe clip CF 2		
13	32 06	2	Piastra x ferma tubo CF3	Plate for tube-blocking CF3		
14	66 08	1	Supp tubi e scatola elett	Hoses/gearbox right supp.		
15	65 97	1	Scatola di der lat	Lateral by-pass box		
16	29 38	6	Rondella zigrinata Ø 10	Knurled washer Ø10		
17	31 29	6	Vite TE parz.fil.UNI5737	Screw UNI 5737 M10X35-10.9		
18	31 23	2	Spina elastica Ø 10x35	Elastic pin Ø10x35		
19	31 22	2	Spina elastica Ø 6x30	Elastic pin Ø6x30		
20	30 45	4	Rondella piana 10.5x30x4	Washer 10.50x30x4		
21	26 90	2	Vite TE parz.fil.UNI5737	Screw UNI 5737 M10X90		
22	02 34	2	Dado autobb. alto M10	Self-locking nut M10 7476		
23	30 41	2	Dado autobb. alto M22	Self-locking nut M22 7473		
24	22 07	3	Rondella zigrinata Ø 8	Knurled washer Ø 8		
25	25 69	3	Vite TCEI UNI5931 M8X20	Screw TCEI UNI 5931 M8X20		
26	21 32	2	Dado autobb. basso M 4	Self-locking nut M 4 7474		
27	21 31	2	Vite TCEI UNI5931 M4X30	Screw TCEI UNI 59312 M4X30		
28	23 30	2	Vite TE parz.fil.UNI5737	Screw TE UNI 5737 M8X60		
29	23 28	2	Vite TE parz.fil.UNI5737	Screw TE UNI 5737 M8X50		
30	16 98	4	Dado autobb. flangiato 8	Flanged self-locking nut 8		

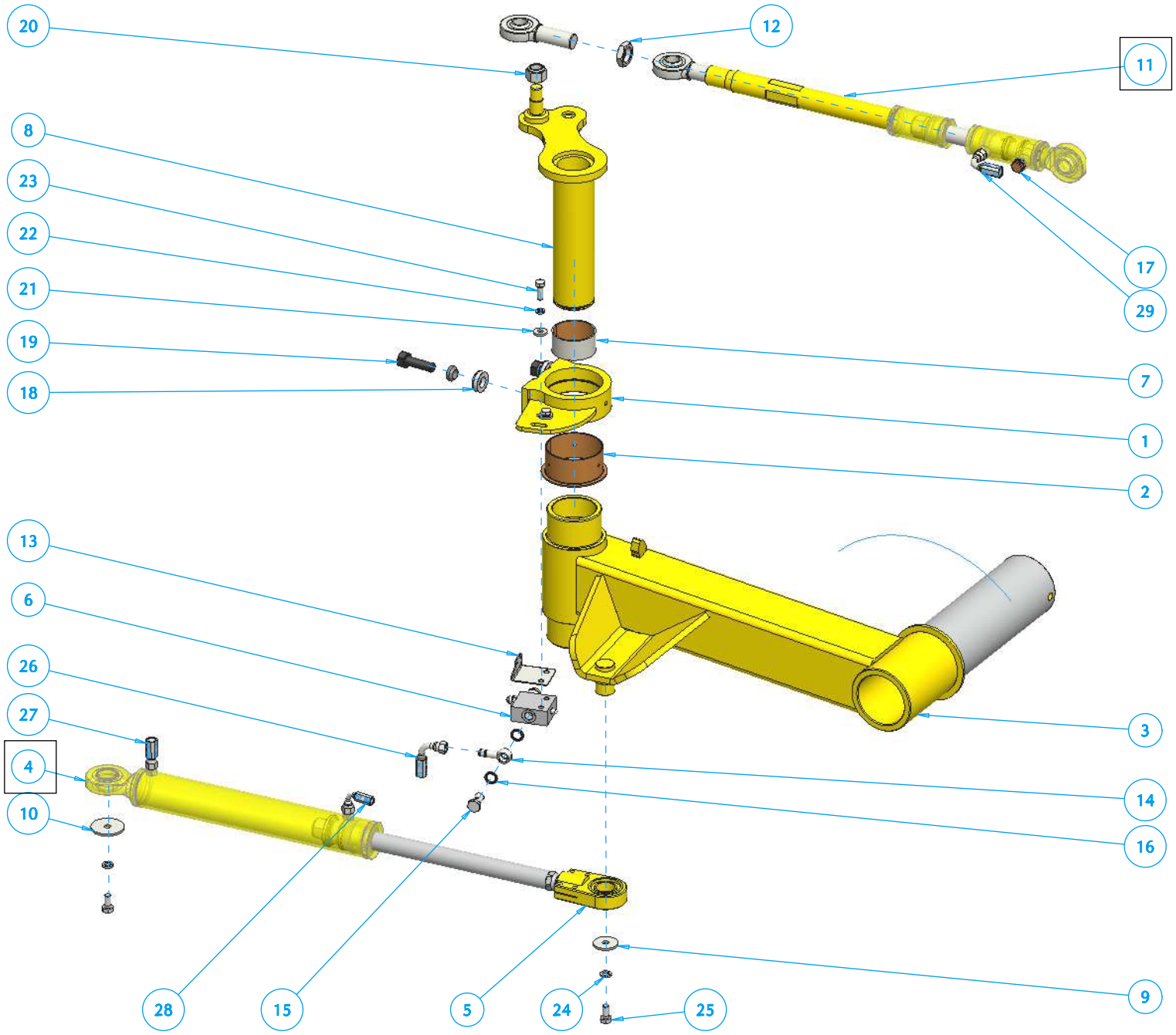
20
12
11
8
23
22
21
19
18
17
29
7
1
2
13
6
26
27
4
10
3
14
16
28
15
5
24
25
9

RT 1000

ROC

R16000-0000_M10

Ref	Code	Qt	Descrizione	Description	Designation	Beschreibung
1	62 91	1	Supporto omega superiore dx	RIGHT upper omega bracket		
2	61 99	1	Boccola 100x105-120x52.5 Bronzo	Bushing 100x105-120x52.5		
3	60 79	1	Braccio laterale DX esterno	RIGHT lat. external arm		
4	60 32	1	Cilindro apertura lat *F-75	SIDE opening cyl. *F-75		
5	60 46	1	Terminale filettato Ø 30 x 2	Ball joint end Ø 30 x2		
6	61 48	1	Valvola a pulsante 3/8 Gas	Switch limit valve 3/8 gas		
7	62 00	1	Boccola 75x40 rinvio laterale	Bushing75x40 lat.countersh.		
8	60 69	1	Rinvio laterale DX	Right side countershaft		
9	63 75	1	Rondella 12,5x45x4	Washer 12.5x45x4		
10	63 76	1	Rondella 12,5x61x4	Washer 12.5x61x4		
11	62 85	1	Cilindro bilanciam. lat *F-73	Short balance cyl.*F-73		
12	30 67	1	Dado speciale 30x2 dx	RIGHT Nut 30x2		
13	65 11	1	Supp. interruttore fine corsa dx	RIGHT switch limit bracket		
14	61 08	2	Occhio 3/8" gas con gambo 9/16'	Eye 3/8" gas 9/16" J		
15	04 27	2	Perno forato 3/8 gas	Pierced pin 3/8 gas		
16	31 59	4	Bonder 3/8 gas	Bonder 3/8 gas		
17	01 65	1	Tappo sfiato da 3/8 gas	Ventilation valve 3/8 gas		
18	62 75	2	Distanziale per vite Ø 18 -Ø39/	Spacer for omega screw Ø18		
19	35 01	2	Vite 18x55 speciale 12.9	Special 18x55 screw 12.9		
20	30 41	1	Dado autobb. alto M22 7473	Self-locking nut M22 7473		
21	30 44	2	Rondella piana 10.5x25x4	Washer 1035x25x4		
22	03 13	2	Rondella spaccata rinf. Ø 10	Reinf. split washer Ø 10		
23	26 82	2	Vite TE int.fil.UNI 5739 M10X30	Thr.screw UNI5739 M10x30		
24	26 06	2	Rondella spaccata rinf. Ø 12	Reinf. split washer Ø12		
25	26 09	2	Vite TE int.fil.UNI 5739 M12X25	Screw TE .UNI 5739 M12x25		
26	T1 71	1	Tubo R2 3/8	Hose R2 3/8		
27	T0 34	1	Tubo R2 2/8	Hose R2 3/8		
28	T0 64	1	Tubo R2 1/4	Hose R2 1/4		
29	T1 73	1	Vedi tubo T1_73	See hose T1_73		

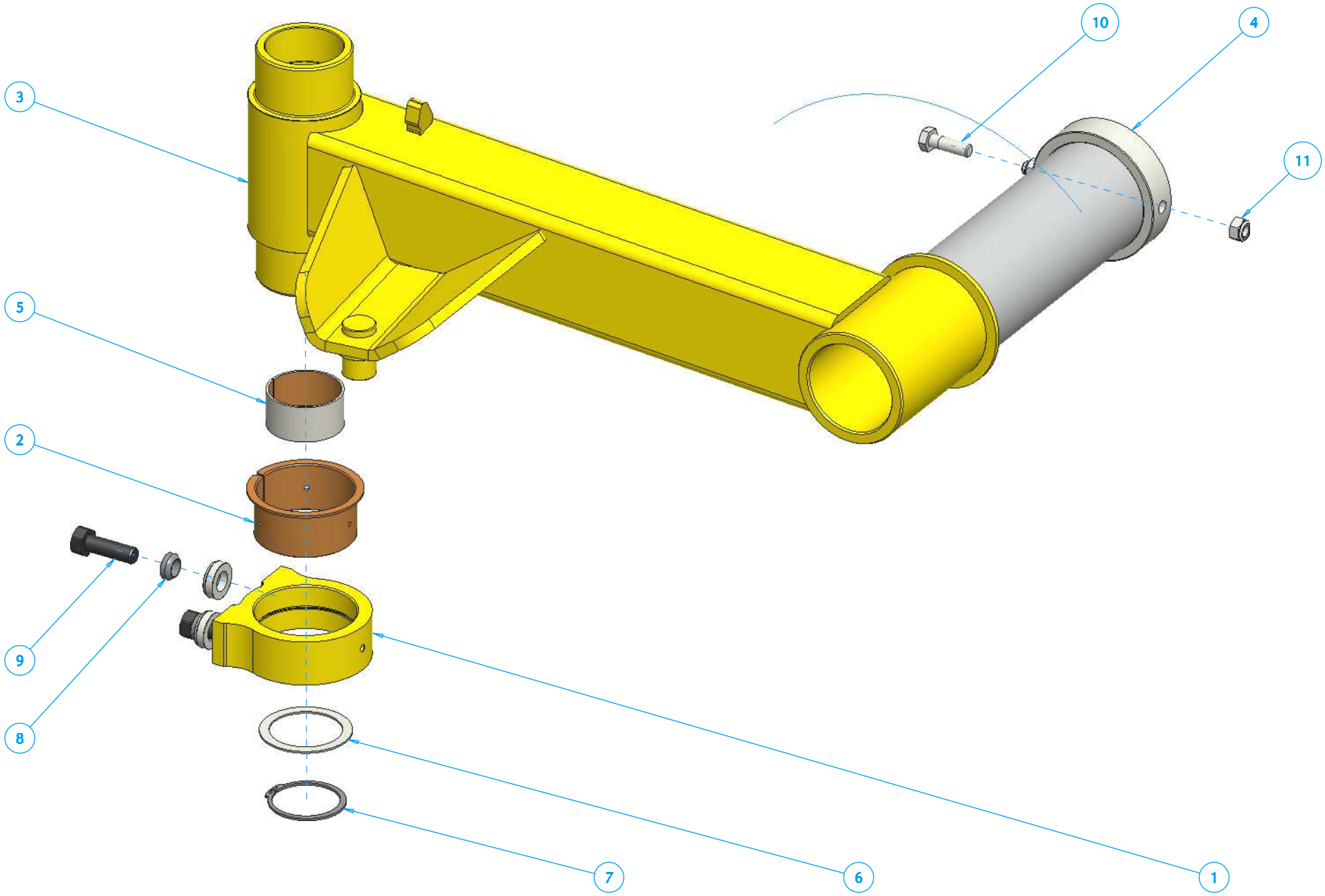
10
4
3
11
5
2
9
8
7
6
1

RT 1000 R16000-0000-M11

Ref	Code	Qt	*Descrizione*	*Description*	*Designation*	*Beschreibung*
1	62 89	1	Supporto omega inferiore	Lower omega bracket		
2	61 99	1	Boccola 100x105-120x52.5	Bushing 100x105-120x52.5		
3	60 79	1	Braccio laterale DX esterno	Right lateral external arm		
4	60 16	1	Anello di fissaggio Ø120	Fixing ring Ø120		
5	62 00	1	Boccola 75x40 rinvio laterale	Bushing 75x40 lat. counters.		
6	63 66	1	Anello di rasamento	Thrust washer		
7	31 21	1	Seger i 75x2.5 UNI 7435	Seger I 75x2.5 UNI7435		
8	62 75	2	Distanziale per vite Ø 18 -Ø39	Spacer for omega screw Ø18		
9	35 01	2	Vite 18x55 speciale 12.9	Special 18x55 screw 12.9		
10	22 47	2	Vite TE parz.fil.UNI5737 M14X45	Screw UNI 5737 M14X45		
11	23 35	2	Dado autobb. basso M14 7474	Self-locking nut M14 7474		

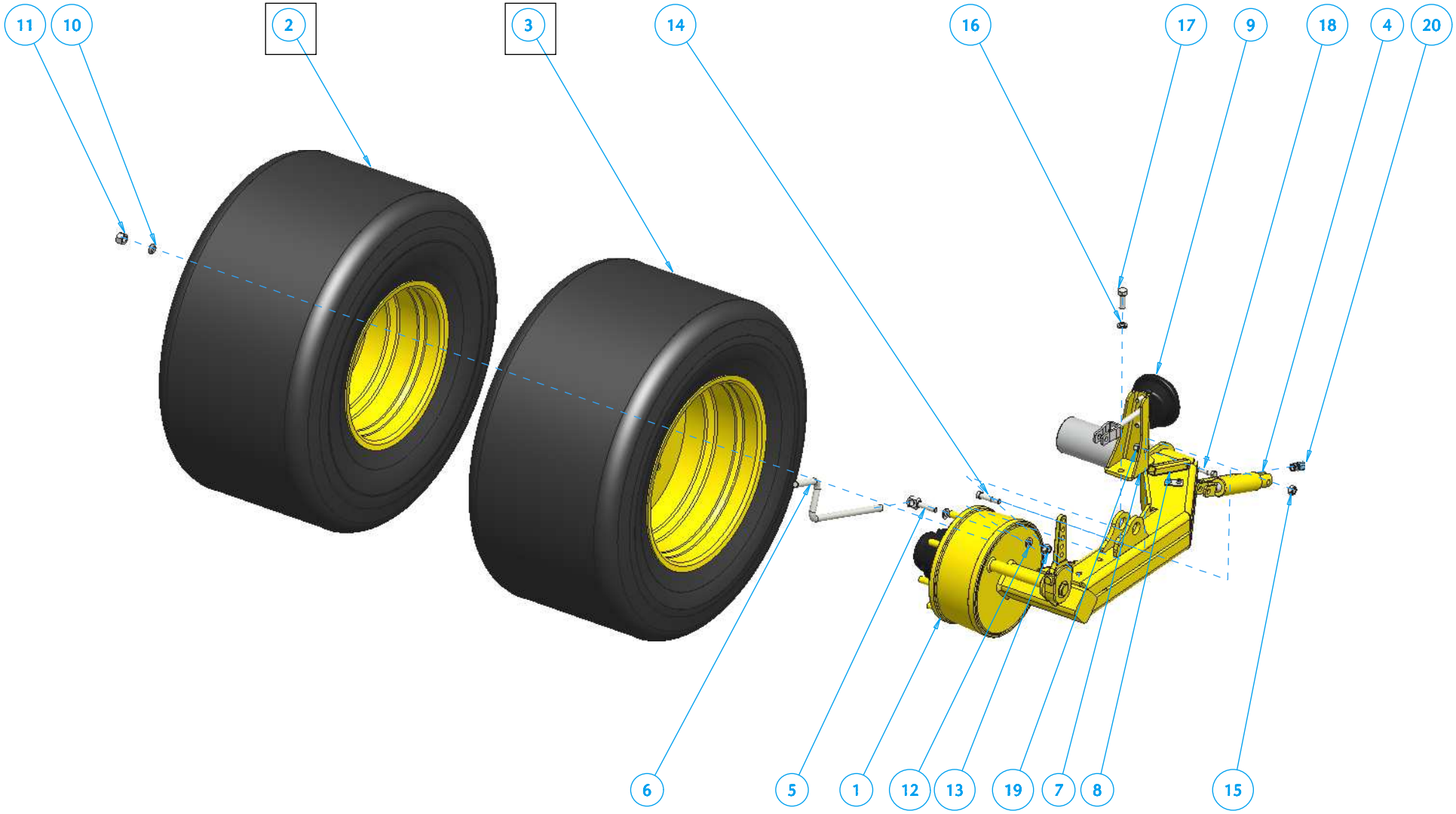
11
10
2
3
14
16
17
9
18
4
20
6
5
1
12
13
19
7
8
15

RT 1000

ROC

R16000-0000_M12

Ref	Code	Qt	Descrizione	Description	Designation	Beschreibung
1	60 95	1	Supporto ruota sinistro	Left wheel bracket		
2	61 82	1	Ruota completa SX *F-107	Complete left wheel*F-107		
3	64 77	1	Ruota completa SX *F-109	Complete left wheel*F-109		
4	61 85	1	Cilindro per frenatura	Cylinder for brakes		
5	64 28	1	Perno filettato per freno staz	Thr. pivot for stat. stop		
6	62 18	1	Manovella freno a mano	Hand brake handle		
7	65 21	1	Supporto Sx Brake Chamber	Left brake chamber supp.		
8	64 52	1	Piastrino guida manovella	Plate for brake handle		
9	64 51	1	Brake chamber 12"	Brake chamber 12"		
10	32 57	8	Rondella spaccata conica Ø18	Split washer Ø18		
11	32 56	8	Dado esag. alto UNI 5587 M18	Hexagonal nut UNI 5587		
12	30 47	2	Rondella piana 14.5x28x3	Washer 14.5x28x3		
13	20 48	1	Dado autobb. alto M14 7473	Self-locking nut M14 7473		
14	32 39	1	Vite a brugola speciale 14x60	Special screw 14x60		
15	23 35	1	Dado autobb. basso M14 7474	Self-locking nut M14 7474		
16	21 89	2	Rondella spaccata rinf. Ø 16	Split reinf.washer Ø 16		
17	26 66	2	Vite TE int.fil.UNI 5739 M16/	Thr. screw UNI5739 M16		
18	26 14	1	Vite TE parz.fil.UNI5737 M12	Screw UNI5737 M12		
19	02 90	1	Dado autobb. alto M12 7473	Self-locking nut M12 7473		
20	T0 97	1	Tubo R2 3/8	Hose R2 3/8		

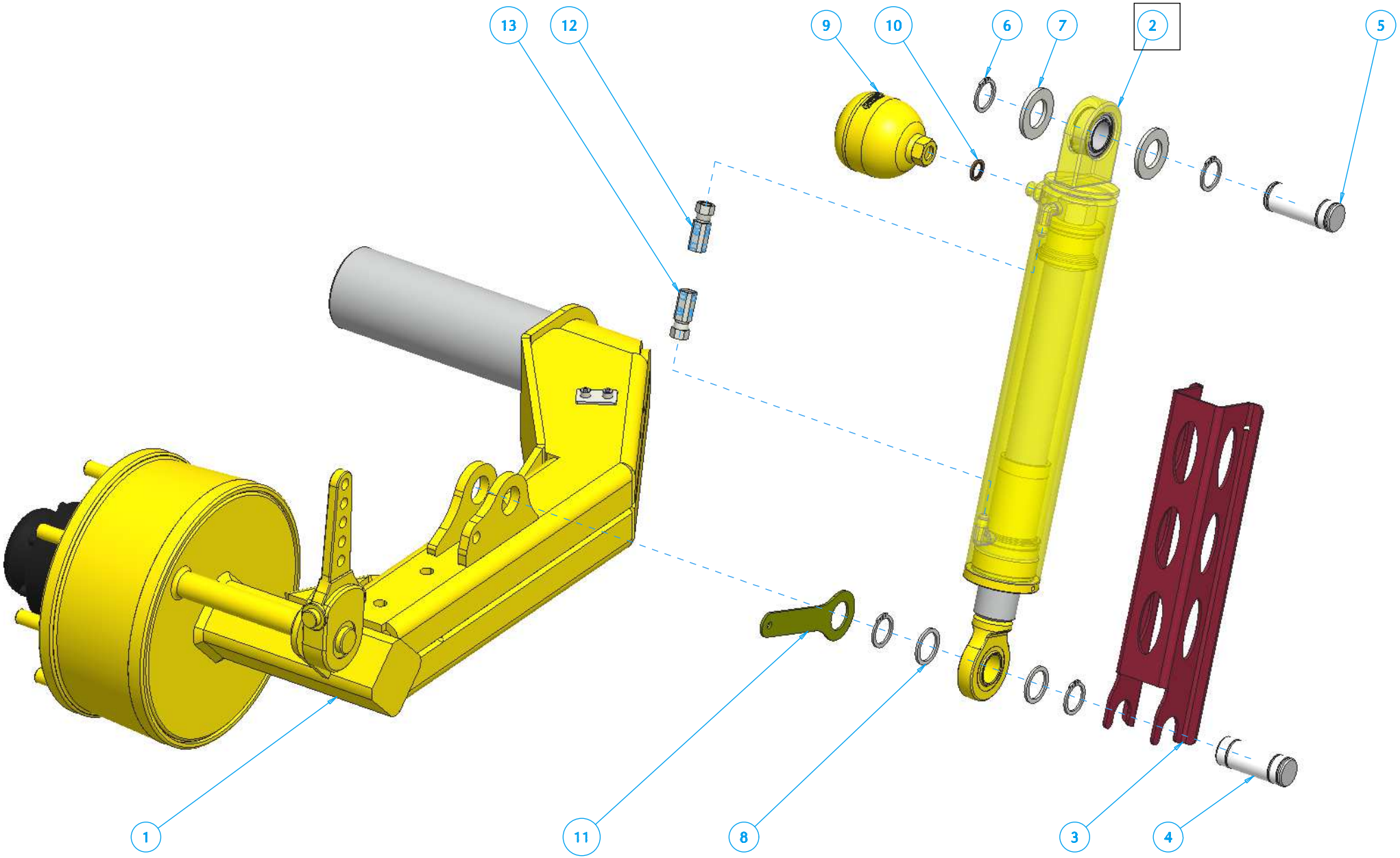
13
12
9
10
6
7
2
5
1
11
8
3
4

RT 1000 R16000-0000-M13

Ref	Code	Qt	Descrizione	Description	Designation	Beschreibung
1	60 95	1	Supporto ruota sinistro	Left wheel bracket		
2	60 33	1	Cilindro alzata ruote SX *F-79	Left wheel lifter cyl.*F-79		
3	66 17	1	Sicurezza per cilindri alzaruote	Secure for wheel lifter cyl.		
4	62 15	1	Perno cromato Ø35x94	Chrome plated pin Ø35x94		
5	62 16	1	Perno cromato Ø35x94	Chrome plated pin Ø35x94		
6	30 61	4	Seger i 35x2.5 UNI 7436	Seger I 35x2.5 INI 7436		
7	63 71	2	Rondella spessore 35x62x5	Washer 35x62x5		
8	63 72	2	Rondella spessore 35x45x3	Washer 35x45x3		
9	03 38	1	LAV.1.035.1(330 bar	LAV 1.035.1 (330BAR) .		
10	19 43	1	Bonder d. 18x1,5	Washer bonder d. 18x1.5		
11	67 65	1	Piastrino tirante molla	Small plate for spring		
12	T1 60	1	Tubo R2 3/8	Hose R2 3/8		
13	T1 61	1	Tubo R2 3/8	Hose R2 3/8		

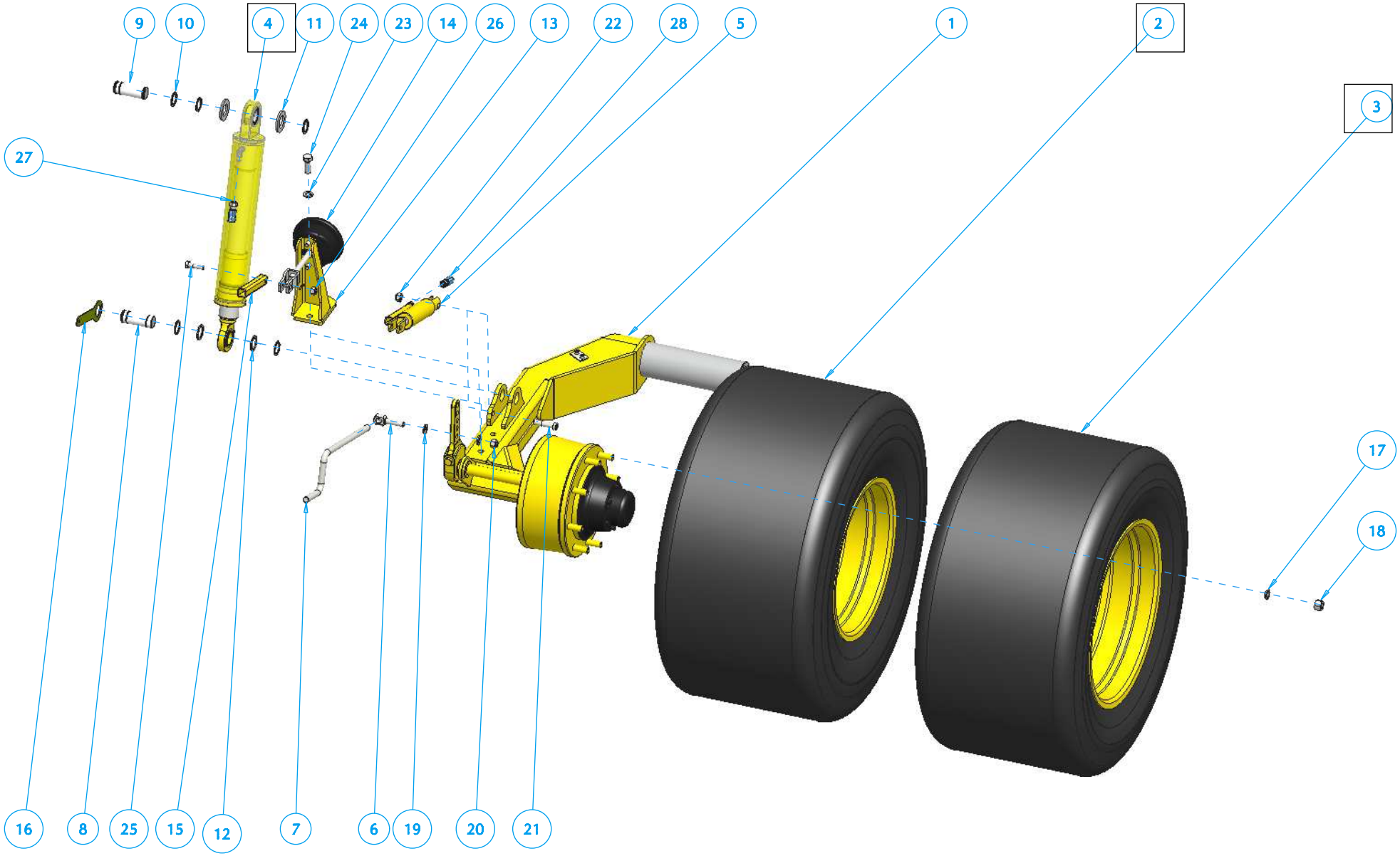
9
10
4
11
24
23
14
26
13
22
28
5
1
2
3
27
17
18
16
8
25
15
12
7
6
19
20
21

RT 1000

ROC

R16000-0000_M14

Ref	Code	Qt	Descrizione	Description	Designation	Beschreibung
1	60 96	1	Supporto ruota destro	Right wheel bracket		
2	64 85	1	Ruota completa DX *F-111	Compl. right wheel*F-111		
3	64_13	1	Ruota completa DX *F-113	Compl.right wheel *F-113		
4	60 35	1	Cil alzata ruoteDX *F-77	Right wheel cyl. *F-77		
5	61 85	1	Cilindro per frenatura	Cylinder for brakes		
6	64 28	1	Perno filettato per freno staz	Thr. pivot for stat. stop		
7	62 18	1	Manovella freno a mano	Hand brake handle		
8	62 15	1	Perno cromato Ø35x94	Chrome plated pin Ø35x94		
9	62 16	1	Perno cromato Ø35x94	Chrome plated pin Ø35x94		
10	30 61	5	Seger i 35x2.5 UNI 7436	Seger I 35x2.5 INI 7436		
11	63 71	2	Rondella spessore 35x62x5	Washer 35x62x5		
12	63 72	2	Rondella spessore 35x45x3	Washer 35x45x3		
13	65 20	1	Supporto Dx Brake Chamber	Right brake chamber supp.		
14	64 51	1	Brake chamber 12"	Hand brake handle		
15	64 52	1	Piastrino guida manovella	Plate for brake handle		
16	67 65	1	Piastrino tirante molla	Small plate for spring		
17	32 57	8	Rondella spaccata conica Ø18	Split washer Ø18		
18	32 56	8	Dado esag. alto UNI 5587 M18	Hexagonal nut UNI 5587 318-8		
19	30 47	2	Rondella piana 14.5x28x3	Washer 14.5x28x3		
20	20 48	1	Dado autobb. alto M14 7473	Self-locking nut M14 7473		
21	32 39	1	Vite a brugola speciale 14x60	Special screw 14x60		
22	23 35	1	Dado autobb. basso M14 7474	Self-locking nut M14 7474		
23	21 89	2	Rondella spaccata rinf. Ø 16	Split reinforced washer Ø16		
24	26 66	2	Vite TE int.fil.UNI 5739 M16/	Thr. screw UNI5739 M16		
25	26 14	1	Vite TE parz.fil.UNI5737 M12	Screw UNI5737 M12		
26	02 90	1	Dado autobb. alto M12 7473	Self-locking nut M12 7473		
27	T1 60	1	Tubo R2 3/8	Hose R2 3/8		
28	T0 97	1	Tubo R2 3/8	Hose R2 3/8		

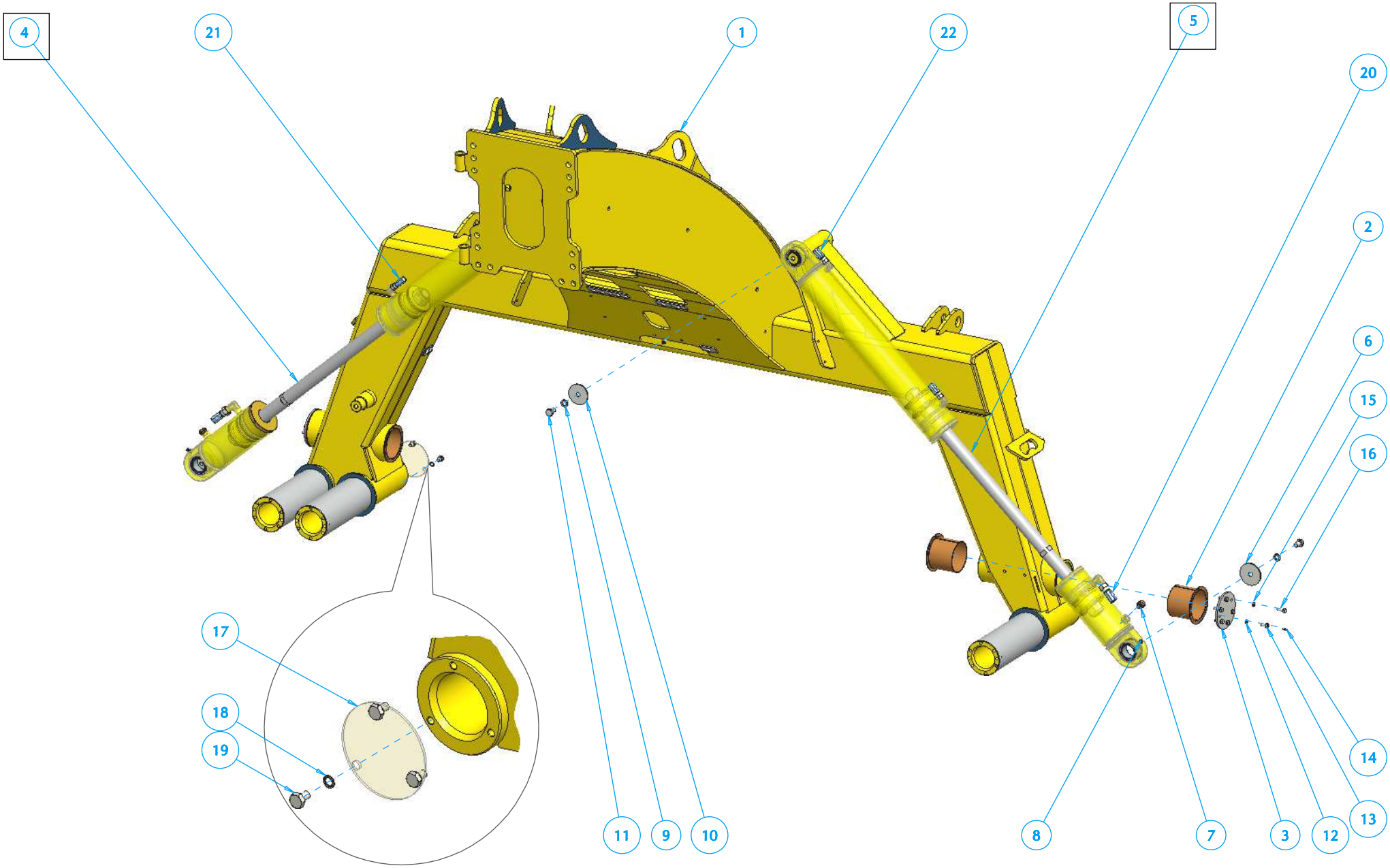
4
21
1
22
5
20
2
6
15
16
17
18
19
11
9
10
8
7
3
12
13
14

RT 1000

ROC

R16000-0000 M15

Ref	Code	Qt	Descrizione	Description	Designation	Beschreibung
1	66 76	1	Telaio principale RT 1000	Main frame RT1000		
2	61 97	4	BKF090 100x105/125x90	Bushing 100x105 - 125x90		
3	63 70	2	Flangia ferma semiasse	Mid-axle blocking flange		
4	66 40	1	Cil doppio chius DX *F-111	Right closure cyl.*F-111		
5	66 41	1	Cil doppio chius SX *F-113	Left closure cyl. *F-113		
6	63_74	2	Rondella 14,5x76x4	Bushing 14.5x76x4		
7	01 65	2	Tappo sfiato da 3/8 gas	Vent. valve 3/8 gas		
8	03 12	4	Ingrassatore M 6 90°	Greaser M6 90°		
9	05 52	4	Rondella spaccata rinf. Ø 14	Split reinf. washer Ø14		
10	63 73	2	Rondella 14,5x70x4	Washer 14.5x70x4		
11	19 45	4	Vite TE int.fil.UNI 5739 M14	Screw UNI 5739 M14x25-8.8		
12	22 07	2	Rondella zigrinata Ø 8	Knurled washer Ø 8		
13	63 88	2	Prolunga ingrassatore M8 / M6	Greaser exten.lead M8/ M6		
14	31 24	2	Ingrassatore M 6 dritto	Greas. fitting M6		
15	23 20	12	Rondella spaccata rinf. Ø 8	Split reinf.washer Ø 8		
16	23 23	12	Vite TE int.fil.UNI 5739 M8	TE screw UNI 5739 M8X25		
17	61 03	3	Coperchio fusello posteriore	Spindle cover		
18	29 38	9	Rondella zigrinata Ø 10	Knurled washer Ø10		
19	31 12	9	VITE TE INT.FIL.UNI 5739	Screw TE UNI 57 39		
20	T0 31	2	Tubo R2 1/2	Hose R2 1/2		
21	T1 41	2	Tubo R2 3/8	Hose R2 3/8		
22	T1 94	2	Vedi tubo T1 94	See hose T1 94		

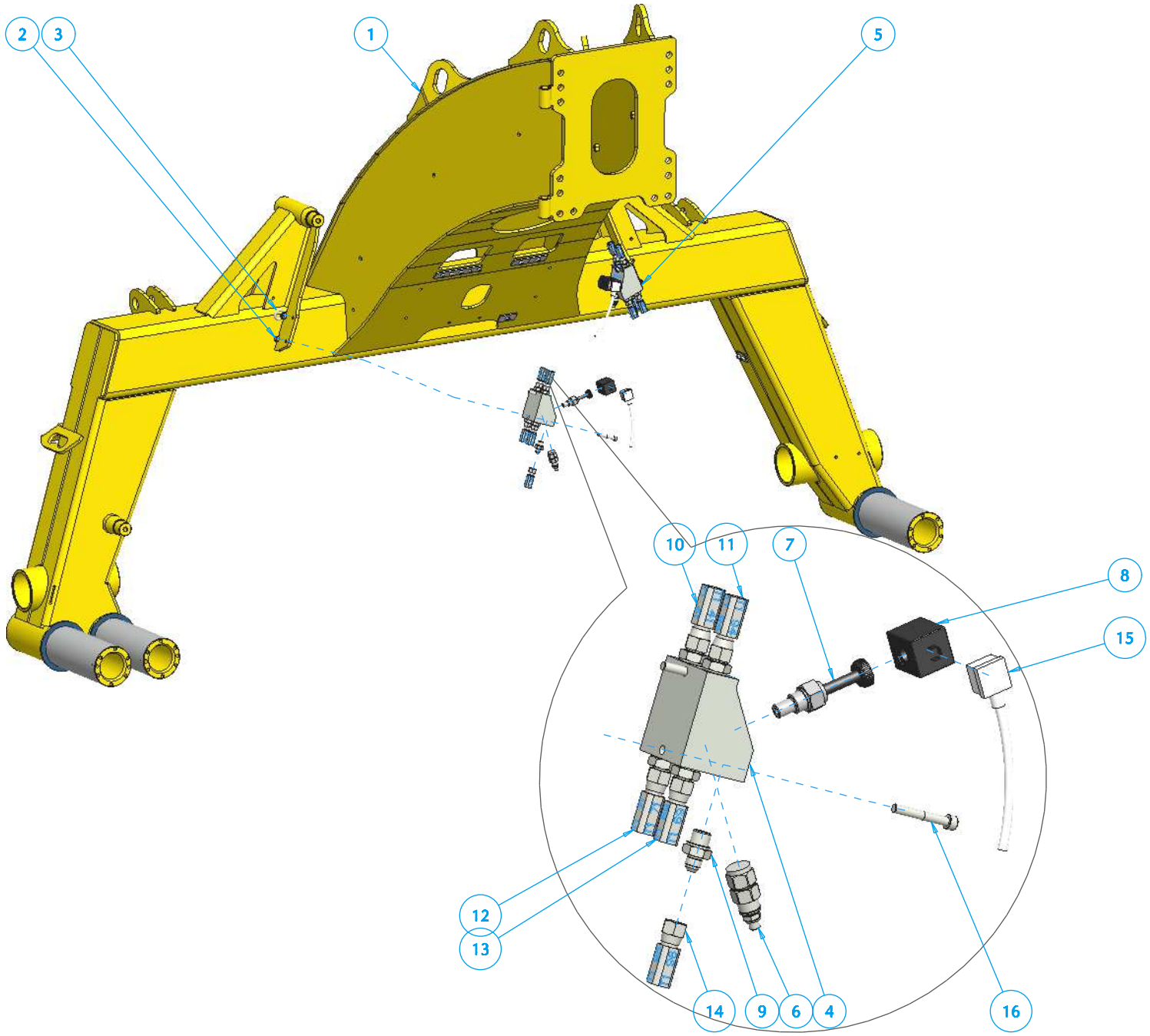
2
3
1
5
10
11
7
8
15
12
13
14
9
6
4
16

RT 1000 R16000-0000-M16

Ref	Code	Qt	*Descrizione*	*Description*	*Designation*	*Beschreibung*
1	66 76	1	Telaio principale RT 1000	Main frame RT1000		
2	29 30	3	Dado autobb. alto M 8 7473	Self-locking nut M6 6926		
3	67 33	1	Golfare M 8	Eyebolt M8		
4	36 89	1	Corpo SX porta valv contr dis	Aluminum left valve holder		
5	36 89	1	Corpo SX porta valv contr dis	Aluminum left valve holder		
6	62 61	2	Cartuccia valvola di bilanciam.	Balancing valve cartridge		
7	36 86	2	Valvola di blocco elettr	One way blocking valve		
8	36 51	2	Bobina Rexroth 12 volt	Rexroth 12volt coil		
9	18 50	10	Niples 3/8 gas 9/16 J	Nipples 3/8 gas 9/16 J		
10	T1 41	2	Tubo R2 3/8	Hose R2 3/8		
11	T1 94	2	Tubo R2 3/8	Hose R2 3/8		
12	T1 71	2	Vedi tubo T1_71	See hose T1_71		
13	T1 69	2	Vedi tubo T1_69	See hose T1_69		
14	T1 96	2	Tubo R2 3/8	Hose R2 3/8		
15	70 47	2	Cavo per bobina sblocco ap	Op. unlocking coil cable		
16	25 45	4	Vite TCEI UNI5931 M8X55	Screw TCEI UNI5931 M8X55		

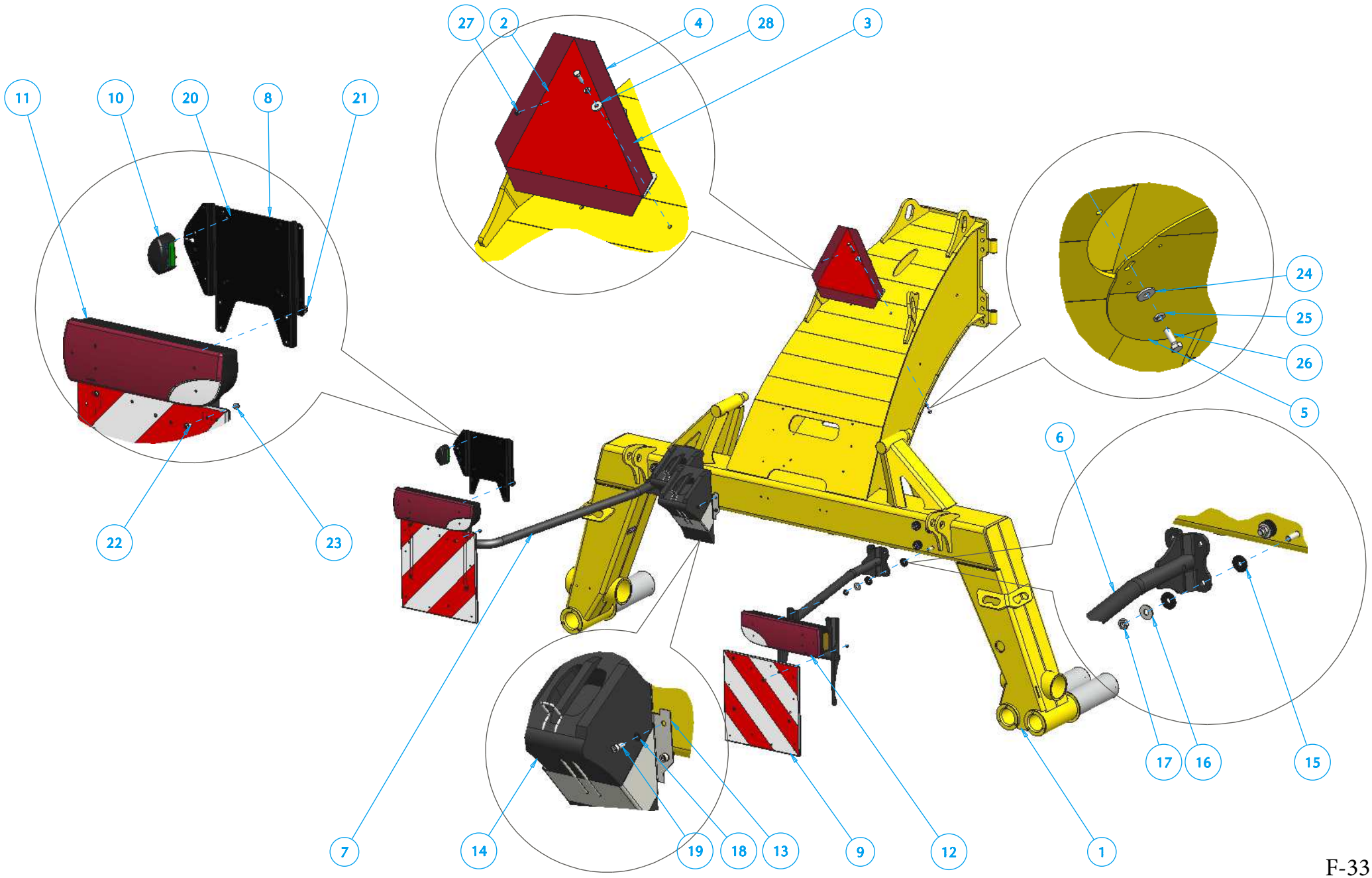
27
2
4
28
3
11
10
20
8
21
24
25
26
5
6
22
23
7
14
19
18
13
9
12
1
17
16
15

RT 1000

ROC

R16000-0000_M17

Ref	Code	Qt	Descrizione	Description	Designation	Beschreibung
1	66 76	1	Telaio principale RT 1000	Main frame RT1000		
2	67 91	1	Supporto SX triangolo segnal.	Left supp. sign. triangle		
3	67 90	1	Supporto DX triangolo segnal	Right supp. sign.triangle		
4	11 66	1	Pannello segnal. esporg USA	Signal board USA		
5	67 86	1	Coperchio inferiore timone	Lower cover drawbar		
6	66 12	1	Supporto pannello - fanale d	Panel support-right light		
7	66 13	1	Supporto pannello - fanale s	Panel support-left light		
8	67 98	1	Portatarga RT 1000	Plate holder RT 1000		
9	34 79	2	Pannello segnal. sporg. F / D	Protrusion signal panel F/D		
10	67 28	1	Fanalino targa a led	Plate led lantern		
11	67 24	1	Fanale multif. Rt 1000 Sx	Multif. left light RT1000		
12	67 25	1	Fanale multif. Rt 1000 Dx	Multifu.right light RT1000		
13	34 94	2	Supporto per cuneo	Support for wedge		
14	34 93	2	Cuneo medio in plastica	Medium plastic wedge		
15	36 83	16	RONDELLA SMORZATRICE 39X13X4	Defusing washer 39x13x4		
16	30 09	8	Rondella piana 14.5x36x3	Flat washer 14.5x36x3		
17	35 43	8	Dado esagonale basso M14X1.5	Hexagonal nut M14x1.5		
18	22 07	6	Rondella zigrinata Ø 8	Knurled washer Ø 8		
19	25 69	6	Vite TCEI UNI5931 M8X20	Screw TCEI UNI 5931 M8X20		
20	30 46	2	Dado autobb. flangiato 5 6926	Fl.self-locking nut 5 6926		
21	16 98	8	Dado autobb. flangiato 8 6926	Fl. self-locking nut 8 6926		
22	34 49	8	Vite button flang. Ø 6x16	Fl. button screw Ø 6x16		
23	25 22	8	Dado autobl.flangiato M6 6926	Fl.self-locking nut M66926		
24	31 14	2	Rondella piana 8.5x24x2.5	Washer 14.5x36x3		
25	23 20	4	Rondella spaccata rinf. Ø 8	Split reinf. washer Ø 8		
26	23 23	4	Vite TE int.fil.UNI 5739 M8X25	TE screw UNI 5739 M8X25		
27	33 61	4	RIVETTO UNI 9200-A 5X12-Inox	Rivet UNI 9200-A 5X12		
28	31 15	2	Rondella piana 8.5x24x3	Washer 8.5x14x3		

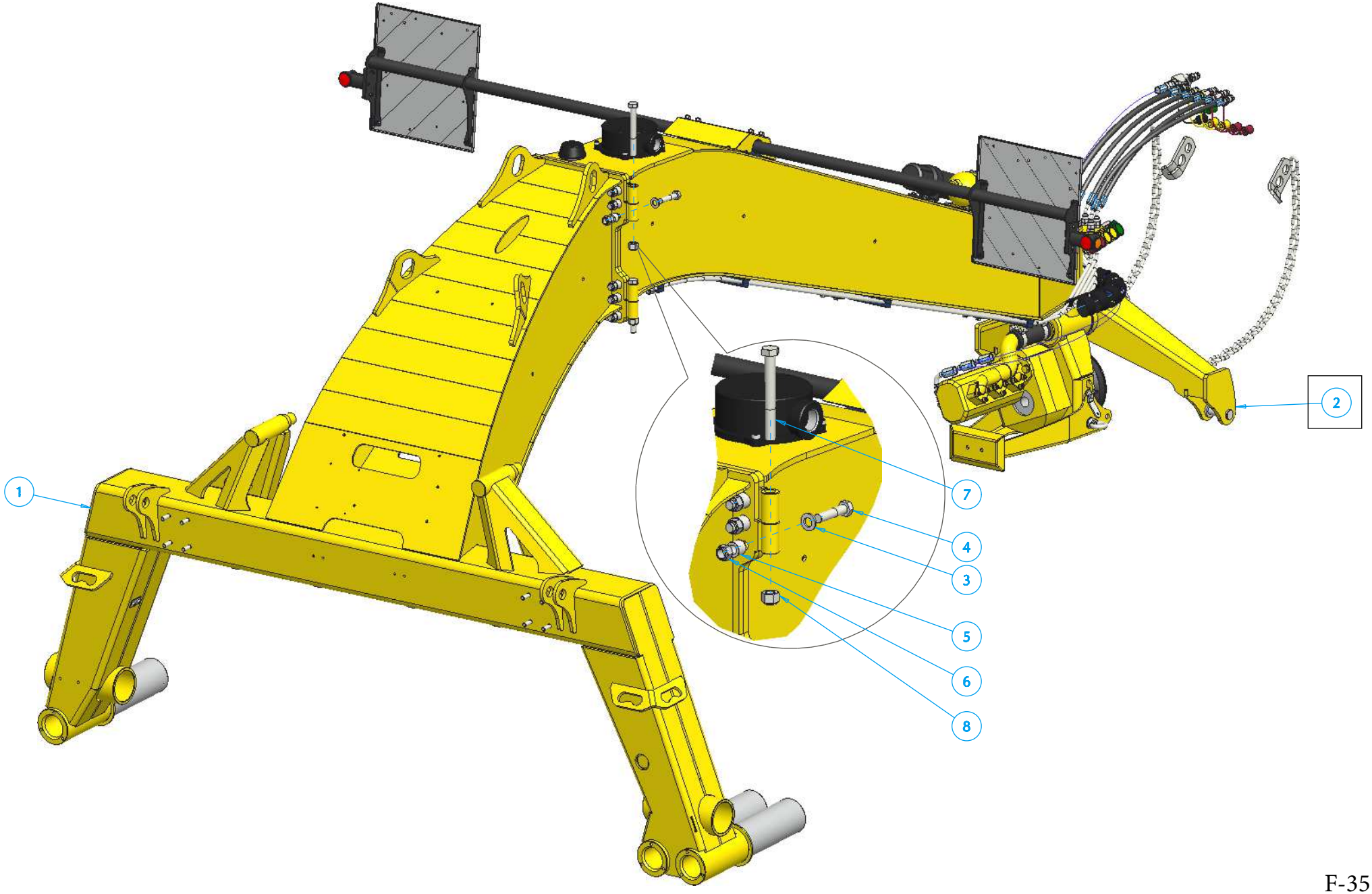
1
2
3
4
5
6
7
8

RT 1000 R16000-0000-M18

Ref	Code	Qt	*Descrizione*	*Description*	*Designation*	*Beschreibung*
1	66 76	1	Telaio principale RT 1000	Main frame RT1000		
2	R16200-0000	1	Vedi pag. B-1	See page B-1		
3	35 05	14	Rondella piana 18.5x34x4	Washer 18x34x4		
4	22 50	14	Vite TE UNI5738- M18X1.5X80	Screw TE UNI5738		
5	66 10	14	Distanziale per vite Ø 18	Spacer for Ø18 fixing screw		
6	03 44	14	Dado autobl. alto 18x1.5	Self-locking nut 18x1.5		
7	35 06	2	Vite TE parz.fil.UNI5737 M20/	Screw TE UNI5737 M20x167		
8	10 08	2	Dado autobb. alto M20 7473	Self-locking nut M20 7473		

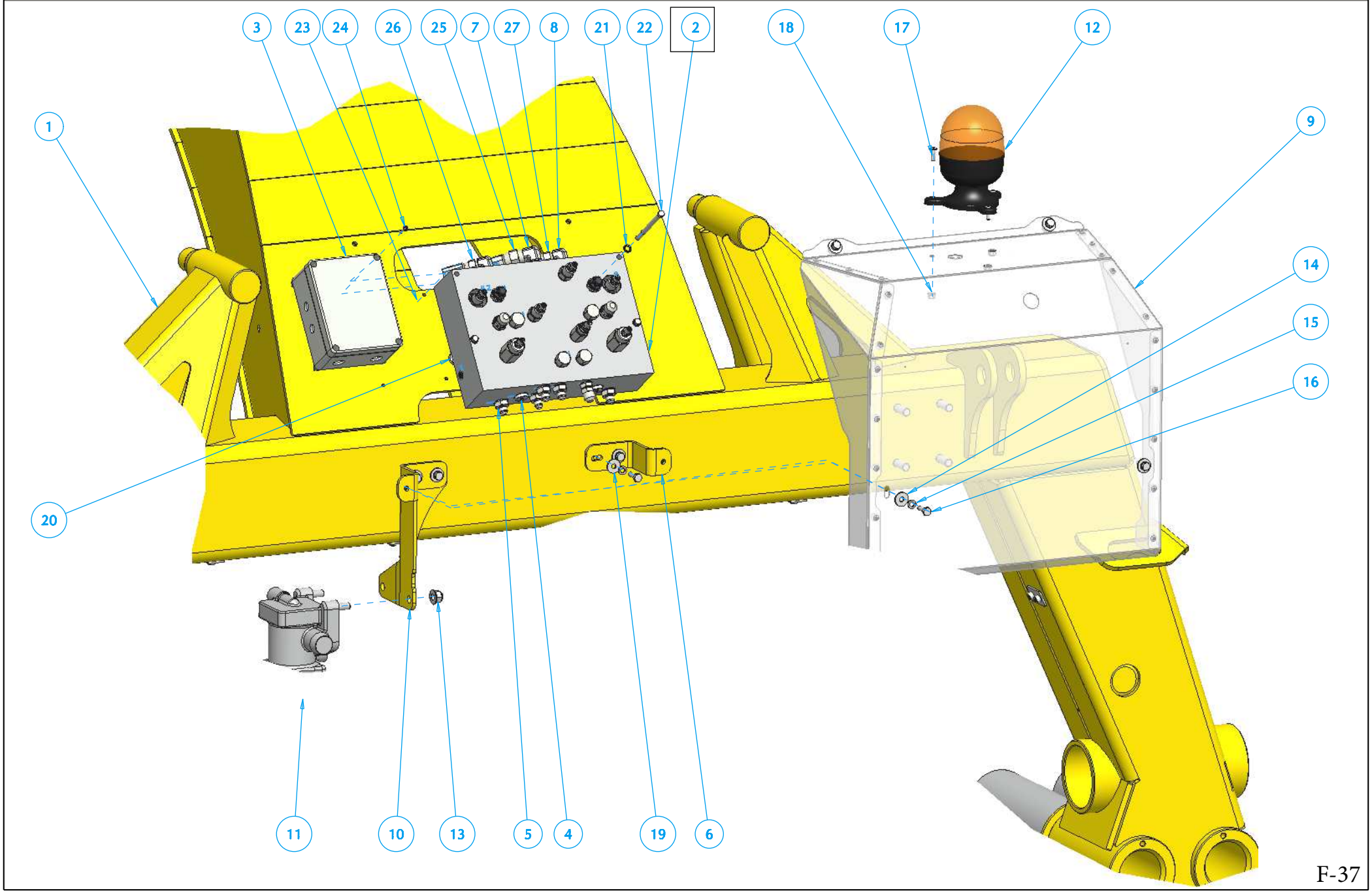
3
23
24
26
25
7
27
8
21
22
2
18
17
12
1
9
14
15
16
20
11
10
13
5
4
19
6

RT 1000

ROC

R16000-0000_M19

Ref	Code	Qt	Descrizione	Description	Designation	Beschreibung
1	66 76	1	Telaio principale RT 1000	Main frame RT1000		
2	61 12	1	Blocco idr principale *F-55	Main hydr.system *F-55		
3	64 92	1	Scatola di derivazione da mat.	Derivation gearbox from frame		
4	31 79	2	Tappo esag. incas. 3/8 gas	Hexagonal oil cap 3/8 gas		
5	18 50	5	Niples 3/8 gas 9/16 J	Nipples 3/8 gas 9/16 J		
6	67 88	2	Supporto cofano posteriore	Rear bonnet support		
7	18 28	1	Curva 90° orient. 1/2 gas 7/8	Fusion bend 90° ½ gas 7/8 J		
8	32 40	2	Curva 90° orient. 3/8 gas 9/16	Nicked nut 20x1.5		
9	68 92	1	Cofano RT 1000/1220	Bonnet RT1000/1220		
10	67 35	1	Supporto cofano x frenatura	Bonnet support for brakes		
11	69 01	1	Servoautodistributore 2 uscite	Self-distributor 2 exits		
12	63 24	1	Lampeggiante	Emergency lights		
13	25 24	2	Dado autobb. flangiato 12 6926	Flanged self-locking nut 12		
14	31 15	4	Rondella piana 8.5x24x3	Washer 8.5x14x3		
15	23 20	8	Rondella spaccata rinf. Ø 8	Split reinforced washer Ø 8		
16	23 23	8	Vite TE int.fil.UNI 5739 M8X25	TE screw UNI 5739 M8X25		
17	33 11	3	Vite button flang. Ø 6x20	Flanged screw Ø6x20		
18	25 22	3	Dado autobl.flangiato M6 6926	Flanged self-locking nut M6		
19	31 14	4	Rondella piana 8.5x24x2.5	Washer 14.5x36x3		
20	35 82	3	Rondella piana 8.5x24x5	Washer 8.5x24x55		
21	22 07	3	Rondella zigrinata Ø 8	Knurled washer Ø 8		
22	25 83	3	Vite TE parz.fil.UNI5737 M8	Screw TE UNI5737 M8X105-8.8		
23	21 32	4	Dado autobb. basso M 4 7474	Self-locking nut M 4 7474		
24	30 15	4	Vite TCEI UNI5931 M4X20	Screw TCEI UNI5931 M4X20		
25	T1 55	1	Vedi tubo T1_55	See hose T1 55		
26	T1 58	1	Vedi tubo T1_58	See hose T1 58		
27	T1 59	1	Vedi tubo T1_59	See hose T1 59		

ROC

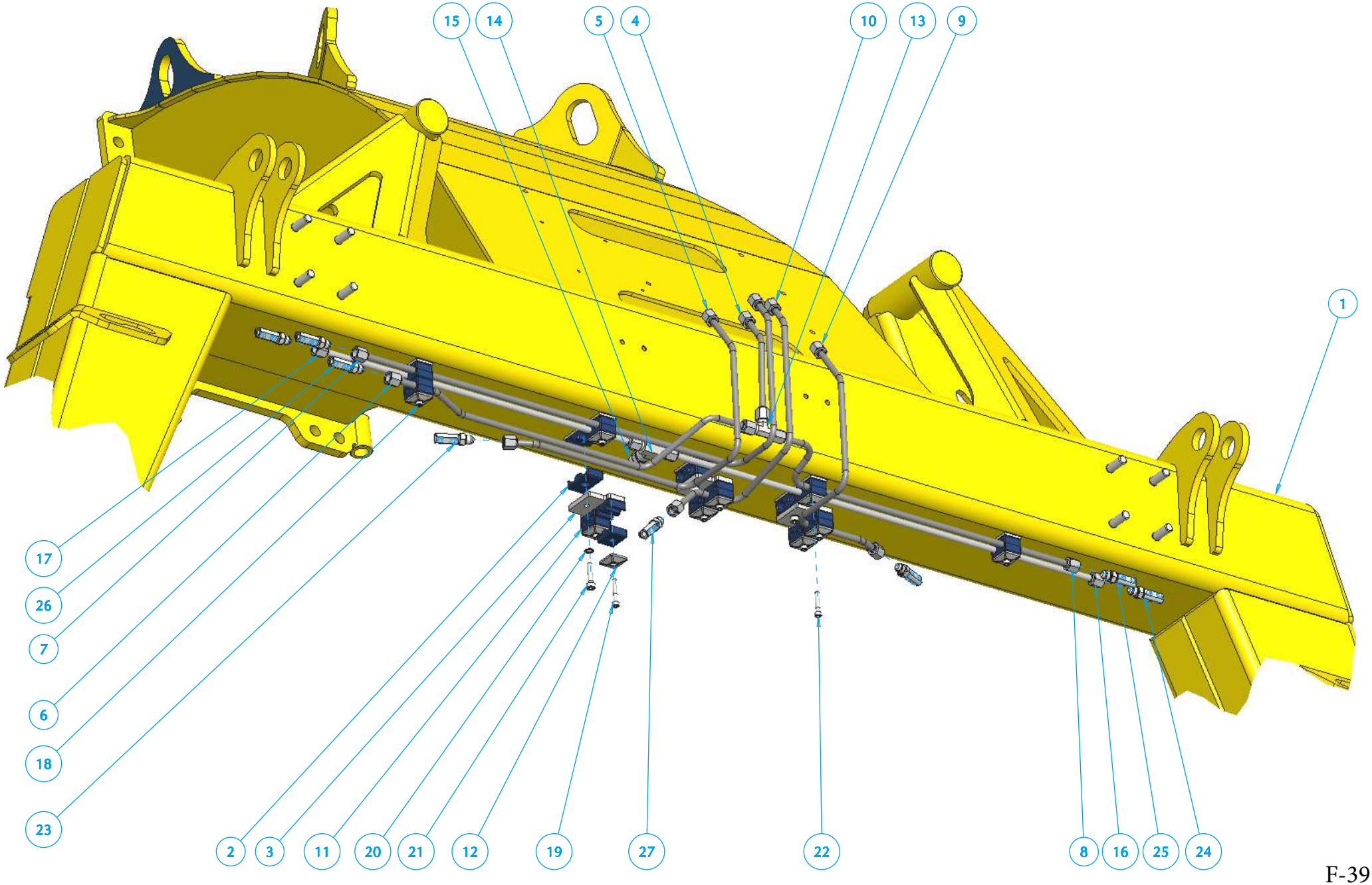
15
14
5
4
10
13
9
1
17
26
7
6
18
23
2
3
11
20
21
12
19
27
22
8
16
25
24

RT 1000

ROC

R16000-0000_M20

Ref	Code	Qt	Descrizione	Description	Designation	Beschreibung
1	66 76	1	Telaio principale RT 1000	Main frame RT1000		
2	30 55	6	Fermatubo doppio CF 2 Ø16	Double pipe clip CF 2 Ø 16		
3	34 82	3	Piastra adattatore fermatubo	Plate for double pipe		
4	67 03	1	Tubo in ferro	Iron hose		
5	66 86	1	Tubo in ferro	Iron hose		
6	66 87	1	Tubo in ferro	Iron hose		
7	66 88	1	Tubo in ferro	Iron hose		
8	66 89	1	Tubo in ferro	Iron hose		
9	66 90	1	Tubo in ferro	Iron hose		
10	66 91	1	Tubo in ferro	Iron hose		
11	34 86	22	Fermatubo doppio CF 1 Ø 10	Double pipe clip CF 1 Ø 10		
12	34 84	10	Piastra x ferma tubo CF1 30x34	Plate for d. pipe clip CF1		
13	34 87	1	Racc. a T MMM.9/16 J	T connector MMM.9/16 J		
14	35 22	1	Racc. a T MFM.9/16J -3/8GAS	T connector MMM.9/16 J		
15	18 49	1	Niples 3/8 gas 3/4 J	Niples 3/8 gas ¾ J		
16	67 18	1	Tubo in ferro	Iron hose		
17	67 19	1	Tubo in ferro	Iron hose		
18	35 34	1	Vite TCEI UNI5931 M6X60	Screw TCEI UNI5931 M6x60		
19	26 66	6	Vite TCEI UNI5931 M6X40	Threaded screw UNI5931		
20	22 07	3	Rondella zigrinata Ø 8	Knurled washer Ø 8		
21	35 33	3	Vite TCEI UNI5931 M8X35	Screw TCEI UNI5931 M8X35		
22	25 65	3	Vite TCEI UNI5931 M6X35	Screw TCEI UNI5931 M6X35		
23	T1 71	2	Vedi tubo T1_72	See hose 71 72		
24	T0 97	2	Vedi tubo T0_97	See hose T0 97		
25	T1 60	2	Vedi tubo T1_60	See hose T1 60		
26	T1 61	1	Vedi tubo T1_61	See hose T1 61		
27	T1 66	1	Vedi tubo T1_66	See hose T1 66		

RT 1000

ROC

R16000-0000_M21

A-4

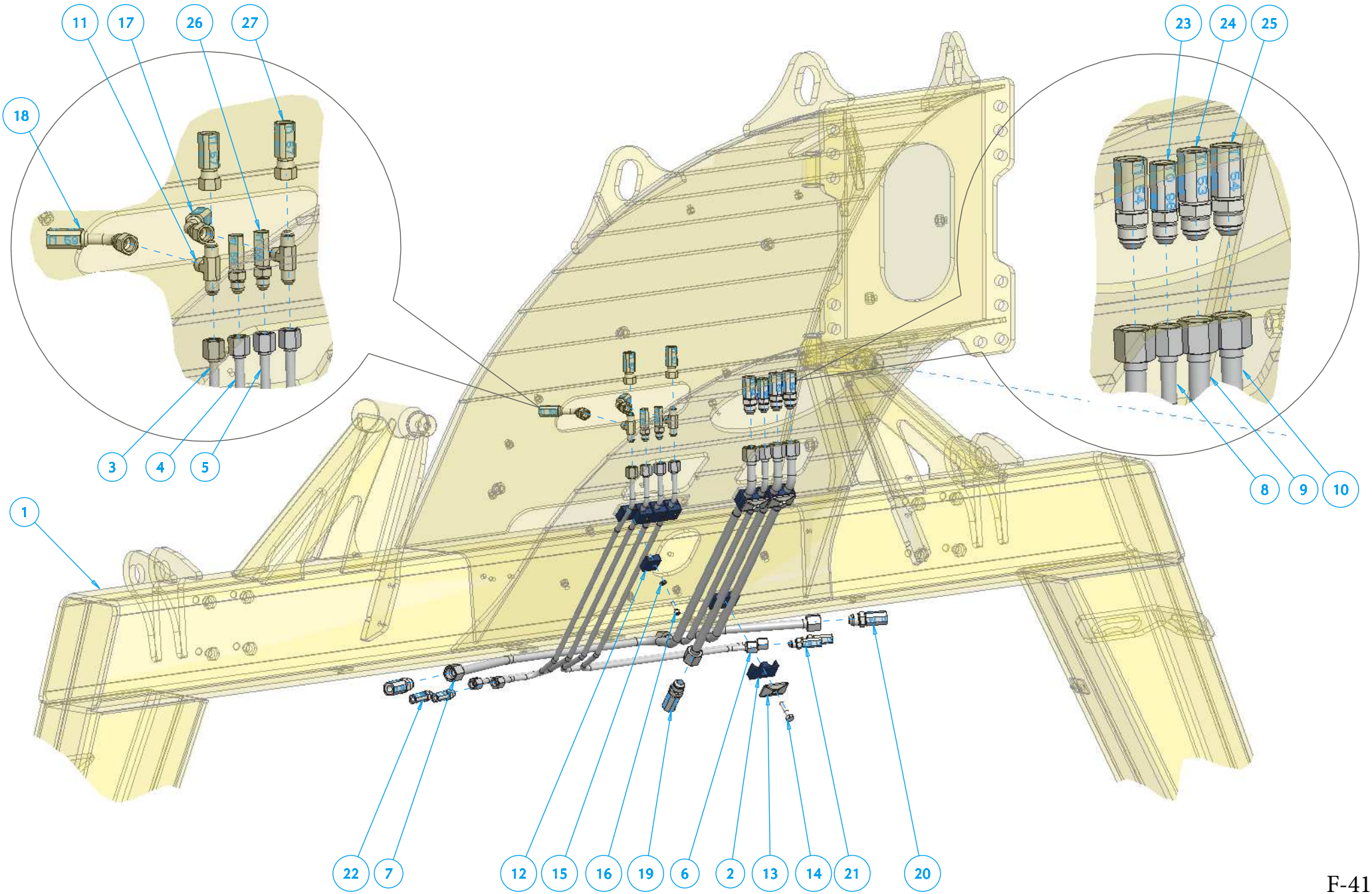

RT 1000

ROC

R16000-0000_M21

Ref	Code	Qt	Descrizione	Description	Designation	Beschreibung
1	66 76	1	Telaio principale RT 1000	Main frame RT1000		
2	30 55	6	Fermatubo doppio CF 2 Ø16	Double pipe clip CF 2Ø16		
3	66 78	1	Tubo in ferro	Iron hose		
4	66 79	1	Tubo in ferro	Iron hose		
5	66 80	1	Tubo in ferro	Iron hose		
6	66 81	1	Tubo in ferro	Iron hose		
7	66 82	1	Tubo in ferro	Iron hose		
8	66 83	1	Tubo in ferro	Iron hose		
9	66 84	1	Tubo in ferro	Iron hose		
10	66 85	1	Tubo in ferro	Iron hose		
11	34 87	2	Racc. a T MMM.9/16 J	T connector MMM.9/16 J		
12	34 88	8	C 1 diam.10	C 1 diam 10		
13	31 18	3	Piastra x ferma tubo CF2 30x51	Plate for pipe clip CF 2		
14	23 25	3	Vite TE parz.fil.UNI5737 M8X35	Screw TE UNI5737 M8X35		
15	31 13	4	Rosetta UNI 6592 6.4X12.5	Washer UNI 6592 6.4X12.5		
16	14 15	4	Vite testa cilind. 6-20-U5931	Cyl.head screw 6-20-U5931		
17	T1 58	1	Tubo R2 3/8	Hose 3/8		
18	T1 59	1	Tubo R2 3/8	Hose 3/8		
19	T1 64	1	Tubo R2 1/2	Hose 3/8		
20	T1 74	2	Tubo R2 1/2	Hose 3/8		
21	T1 67	2	Vedi tubo T1_67	See hose T1 67		
22	T1 96	2	Vedi tubo T1_96	See hose T1 96		
23	T0 96	1	Vedi tubo T0_96	See hose T0 96		
24	T1 53	1	Vedi tubo T1_53	See hose T1 53		
25	T1 54	2	Vedi tubo T1_54	See hose T1 54		
26	T1 56	2	Vedi tubo T1_56	See hose T1 56		
27	T1 57	2	Vedi tubo T1_57	See hose T1 57		

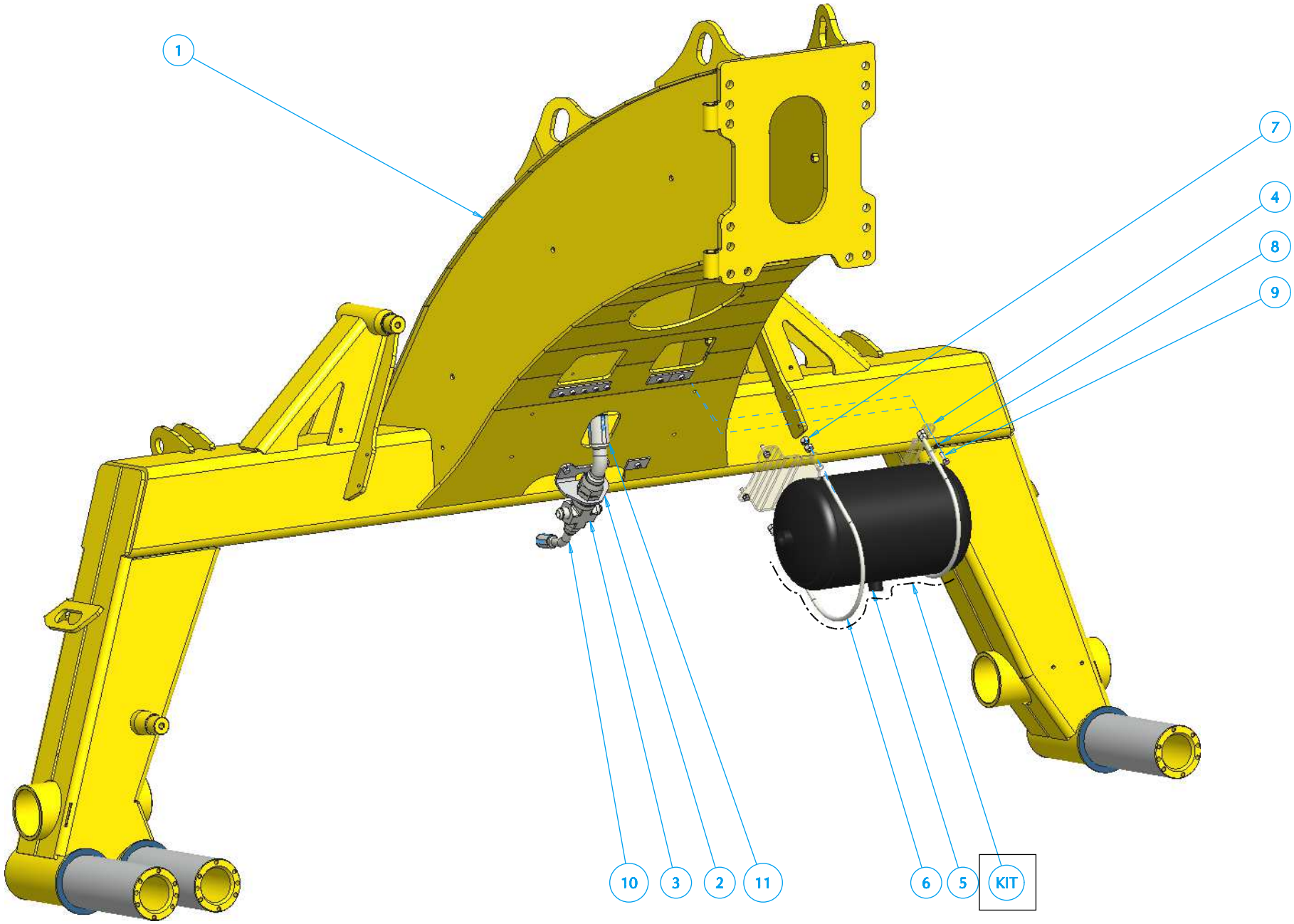
1
7
4
8
9
10
3
2
11
6
5
KIT

RT 1000 R16000-0000-M22

Ref	Code	Qt	*Descrizione*	*Description*	*Designation*	*Beschreibung*
1	66 76	1	Telaio principale RT 1000	Main frame RT1000		
2	67 87	1	Supporto per raccordo a croce	Cross fitting support		
3	66 68	1	Raccordo a croce 1"1/16-1"5/8J	Cross fitt. 1"1/16-1"5/8J		
4	67 36	2	Supporto bombola aria x RT	Air tank support RT1000		
5	64 49	1	Serbatoio aria 20 Lt	Air container 20lt		
6	64 50	2	Tirante M10 per Ø 250	Conn.rod M10 for Ø250		
7	02 97	8	Dado esag. alto UNI 5587 M10	Nut UNI 5587 M10		
8	23 20	6	Rondella spaccata rinf. Ø 8	Split reinf.washer Ø 8		
9	23 23	6	Vite TE int.fil.UNI 5739 M8X25	TE screw UNI 5739 M8X25		
10	T1 78	1	Vedi tubo T1_78	See hose T1 78		
11	T1 48	1	Vedi tubo T1_48	See hose T1 48		

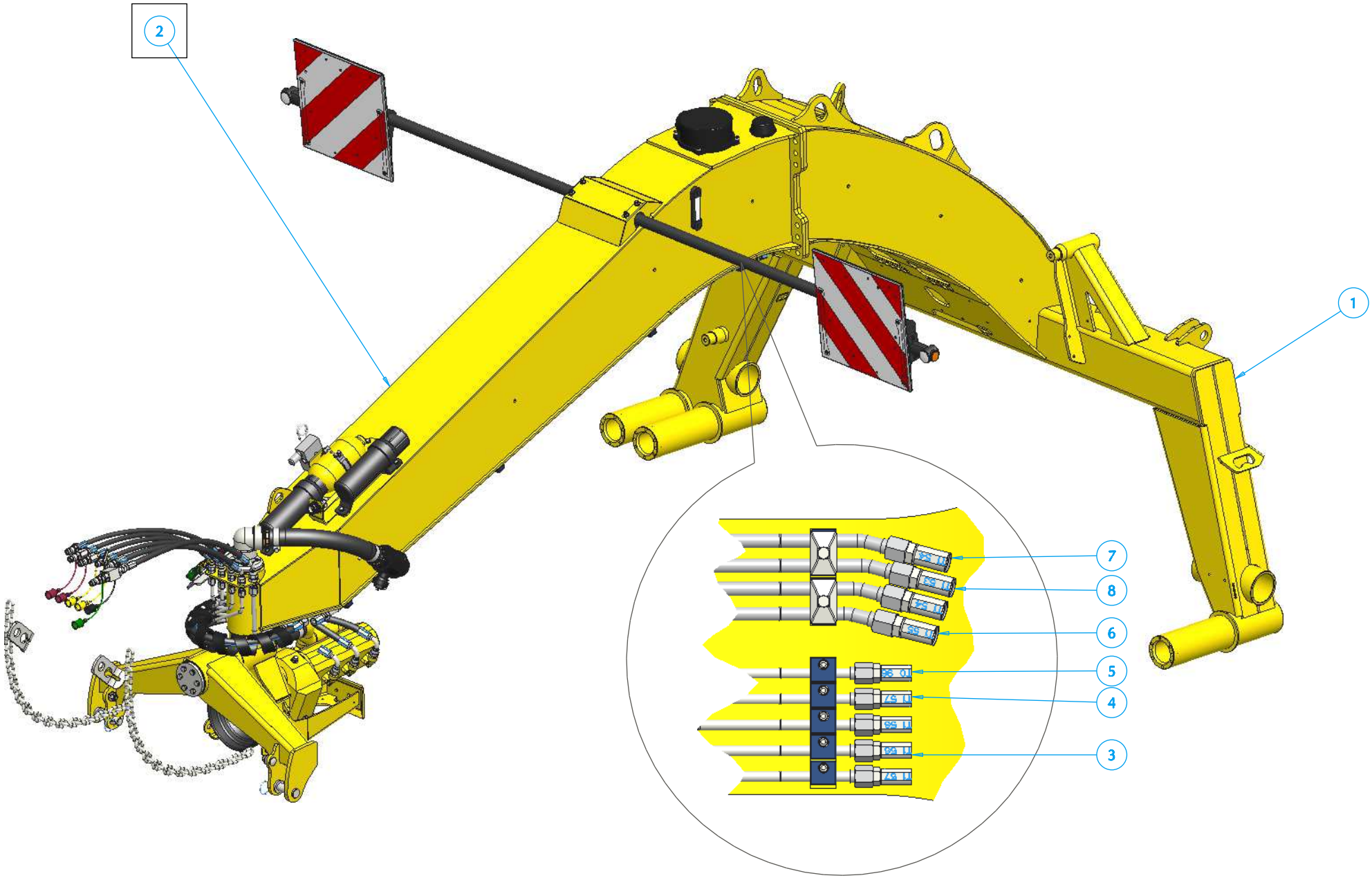
2
1
7
8
6
5
4
3

RT 1000 R16000-0000-M23

Ref	Code	Qt	*Descrizione*	*Description*	*Designation*	*Beschreibung*
1	66 76	1	Telaio principale RT 1000	Main frame RT1000		
2	R16200-0000	1	Vedi pag. B-1	See page B-1		
3	T1 56	2	Tubo R2 3/8	Hose R2 3/8		
4	T1 57	2	Tubo R2 3/8	Hose R2 3/8		
5	T0 96	1	Tubo R2 3/8	Hose R2 3/8		
6	T1 55	1	Tubo R2 1/2	Hose R2 1/2		
7	T1 54	2	Tubo R2 1/2	Hose R2 1/2		
8	T1 53	1	Tubo R2 1/2	Hose R2 1/2		

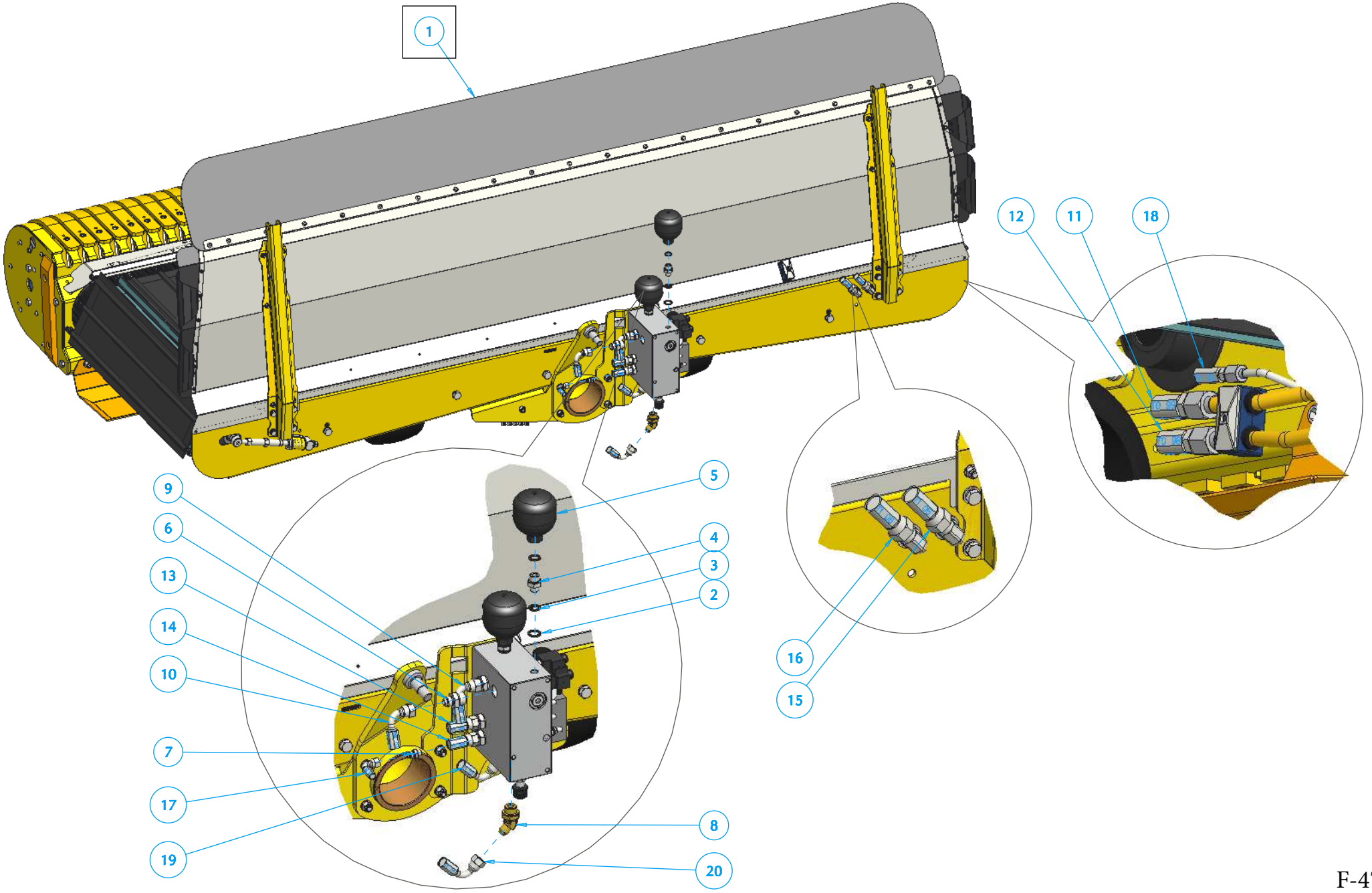
1
12
11
18
9
6
13
14
10
7
17
19
5
4
3
2
8
20
16
15

RT 1000 R16000-0000-M24

Ref	Code	Qt	*Descrizione*	*Description*	*Designation*	*Beschreibung*
1	R23100-0000	1	Vedi pag. E-1	See page E-1		
2	19 02	2	Bonder 1/2 gas	Washer bonder 1/2 gas		
3	19 43	4	Bonder d. 18x1,5	Washer bonder d. 18x1.5		
4	32 59	2	Niples 1/2 gas 18x1.5	Niples ½ gas 18x1.5		
5	33 01	2	Accumulatore 0,32LT	Accumulator 0.32 LT		
6	19 79	4	Niples 3/4 gas 7/8 J	Niples ¾ gas 7/8 J		
7	18 51	1	Niples 1/4 gas 9/16 J	Niples ¼ gas 9/16 J		
8	32 76	2	Curva 45° orient. 3/4 gas	Bend 45° orient.		
9	T0 98	1	Tubo R2 1/2	Hose R2 1/2		
10	T0 99	1	Tubo R2 1/2	Hose R2 1/2		
11	T0 99	1	Vedi tubo T0_99	See hose T0 99		
12	T0 98	1	Vedi tubo T0_98	See hose T0 98		
13	T1 05	1	Tubo R2 1/2	Hose R2 1/2		
14	T1 06	1	Tubo R2 1/2	Hose R2 1/2		
15	T1 05	1	Vedi tubo T1_05	See hose T1 05		
16	T1 06	1	Vedi tubo T1_06	See hose T1 06		
17	T1 01	1	Tubo R1 1/4	Hose R2 1/4		
18	T1 01	1	Vedi tubo T1_01	See hose T1 01		
19	T1 77	1	Tubo R2 1/2	Hose R2 1/2		
20	T1 74	1	Vedi tubo T1_74	See hose T1 74		

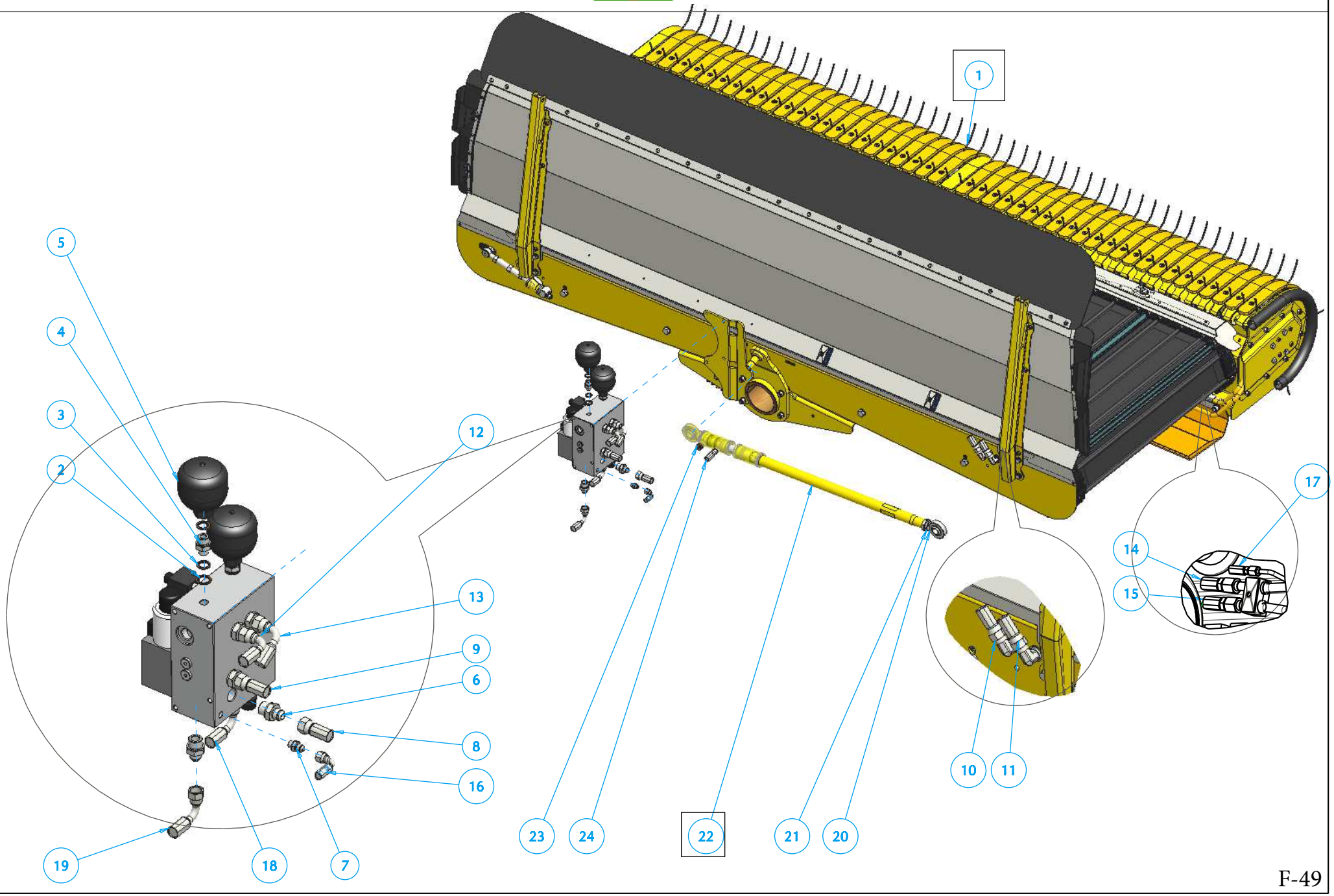
1
2
3
4
5
6
7
8
9
10
11
12
13
14
15
16
17
18
19
20
21
22
23
24

RT 1000 R16000-0000-M25

Ref	Code	Qt	Descrizione	Description	Designation	Beschreibung
1	R23200-0000	1	Vedi pag. C-1	See page C-1		
2	19 02	2	Bonder 1/2 gas	Washer bonder 1/2 gas		
3	19 43	4	Bonder d. 18x1,5	Washer bonder d. 18x1.5		
4	32 59	2	Niples 1/2 gas 18x1.5	Niples ½ gas 18x1.5		
5	33 01	2	Accumulatore 0,32LT (16 Bar)	Accumulator 0.32 LT (16 bar)		
6	19 79	6	Niples 3/4 gas 7/8 J	Niples ¾ gas 7/8 J		
7	18 51	1	Niples 1/4 gas 9/16 J	Niples ¼ gas 9/16 J		
8	T1 03	1	Tubo R2 1/2	Hose R2 1/2		
9	T1 04	1	Tubo R2 1/2	Hose R2 1/2		
10	T1 03	1	Vedi tubo T1_03	See hose T1 03		
11	T1 04	1	Vedi tubo T1_04	See hose T1 04		
12	T0 88	1	Tubo R2 1/2	Hose R2 1/2		
13	T0 87	1	Tubo R2 1/2	Hose R2 1/2		
14	T0 87	1	Vedi tubo T0_87	See hose T0 87		
15	T0 88	1	Vedi tubo T0_88	See hose T0 88		
16	T1 01	1	Tubo R1 1/4	Hose R1 1/4		
17	T1 01	1	Vedi tubo T1_01	See hose T1 01		
18	T1 64	1	Vedi tubo T1_64	See hose T1 64		
19	T1 78	1	Tubo R2 1/2	Hose R2 1/2		
20	60 48	1	Terminale filettato destro Ø 25	Right joint end Ø25		
21	30 67	1	Dado speciale 30x2 dx	Right Nut 30x2		
22	66 39	1	Martbil centrale lu *F-83	Long centr. bal. cyl.*F-83		
23	01 65	1	Tappo sfiato da 3/8 gas	Ventilation valve 3/8 gas		
24	T0 47	1	Vedi tubo T0_47	See hose T0 47		

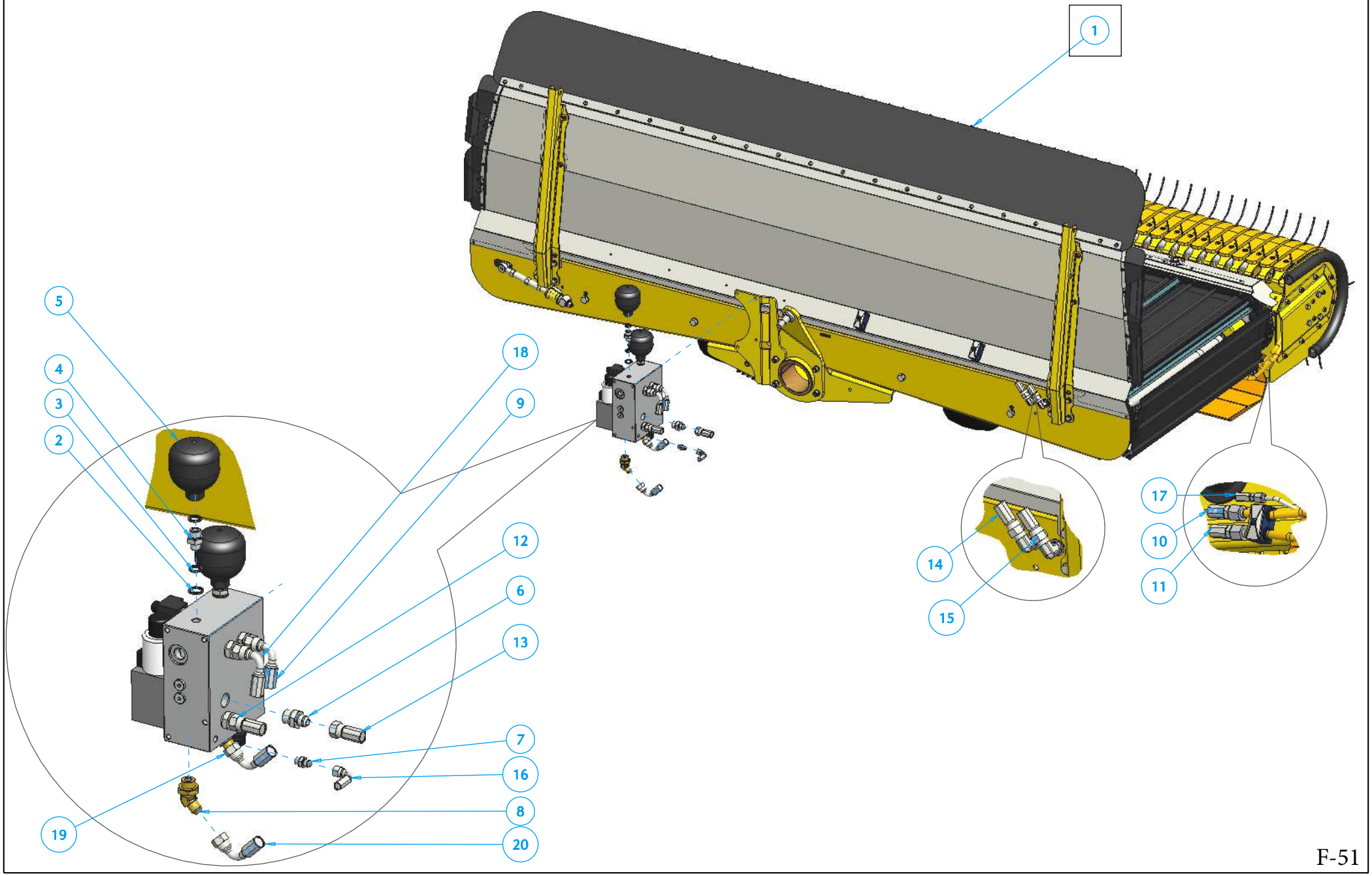
1
5
4
3
2
18
9
12
6
13
7
16
8
20
19
14
15
17
10
11

RT 1000 R16000-0000-M26

Ref	Code	Qt	Descrizione	Description	Designation	Beschreibung
1	R23300-0000	1	Vedi pag. D-1	See page D-1		
2	19 02	2	Bonder 1/2 gas	Washer bonder 1/2 gas		
3	19 43	4	Bonder d. 18x1,5	Washer bonder d. 18x1.5		
4	32 59	2	Niples 1/2 gas 18x1.5	Niples 1/2 gas 18x1.5		
5	33 01	2	Accumulatore 0,32LT	Accumulator 0.32 LT		
6	19 79	4	Niples 3/4 gas 7/8 J	Niples ¾ gas 7/8 J		
7	18 51	1	Niples 1/4 gas 9/16 J	Niples ¼ gas 9/16 J		
8	32 76	2	Curva 45° orient. 3/4 gas	Bend 45° orient. 3/4gas		
9	T0 98	1	Tubo R2 1/2	Hose R2 1/2		
10	T0 98	1	Vedi tubo T0_98	See hose T0 98		
11	T1 00	1	Vedi tubo T1 _00	See hose T1 00		
12	T1 03	1	Tubo R2 1/2	Hose R2 1/2		
13	T1 04	1	Tubo R2 1/2	Hose R2 1/2		
14	T1 03	1	Vedi tubo T1_03	See hose T1 03		
15	T1 04	1	Vedi tubo T1_04	See hose T1 04		
16	T1 02	1	Tubo R1 1/4	Hose R1 1/4		
17	T1 02	1	Vedi tubo T1_02	See hose T1 02		
18	T1 00	1	Tubo R2 1/2	Hose R2 1/2		
19	T1 74	1	Vedi tubo T1_74	See hose T1 74		
20	T1 77	1	Tubo R2 1/2	Hose R2 1/2		

RT 1000

ROC

R16000-0000-M27-INGL

A-4

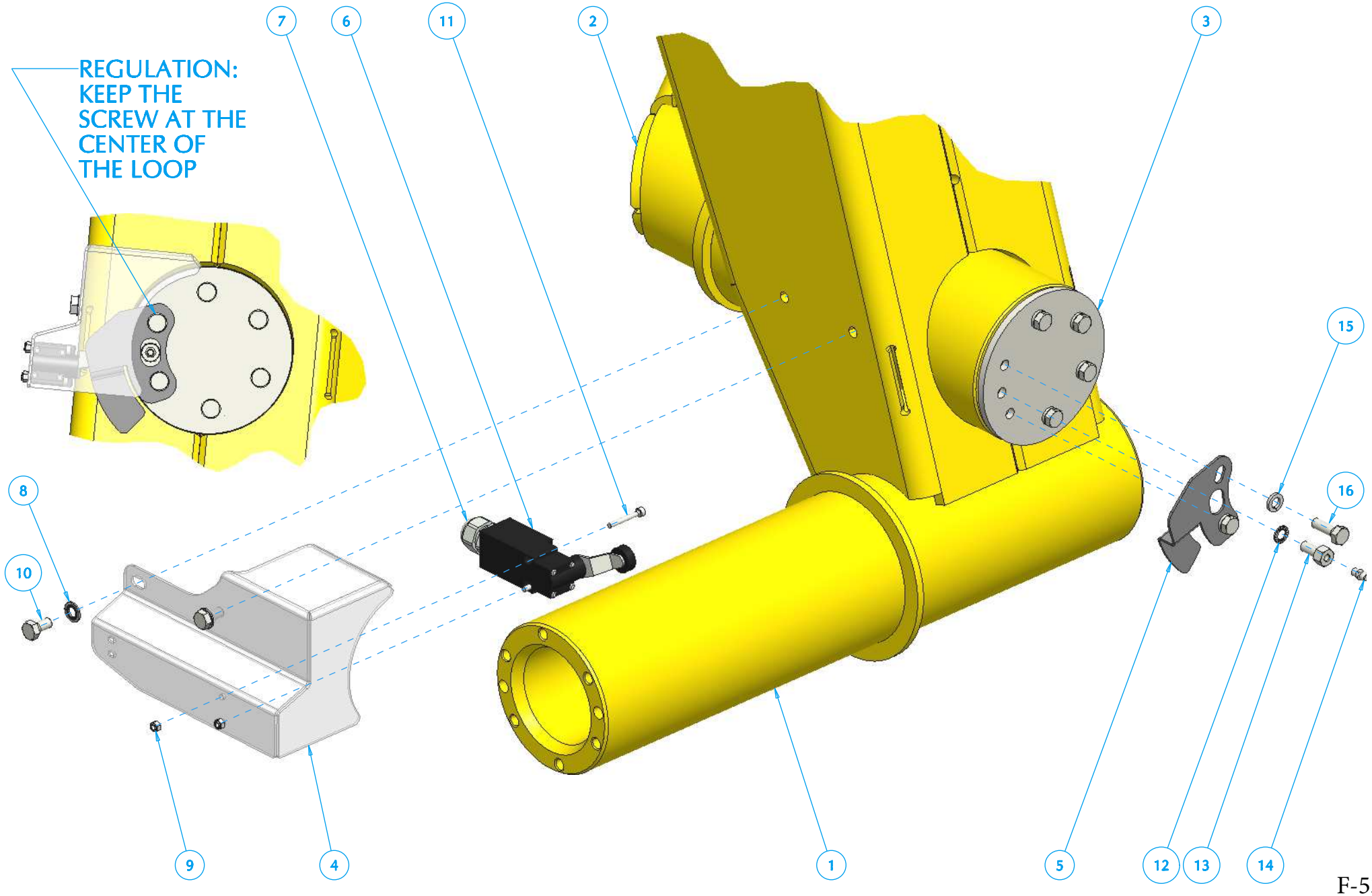

RT 1000

R16000-0000-M27-INGL

Ref	Code	Qt	*Descrizione*	*Description*	*Designation*	*Beschreibung*
1	66 76	1	Telaio principale RT 1000	Main frame RT1000		
2	60 95	1	Supporto ruota sinistro	Left wheel bracket		
3	63 70	1	Flangia ferma semiasse	Mid-axle blocking flange		
4	69 55	1	Coperchio interruttore	Switch cover		
5	69 54	1	Piastrino	Plate		
6	69 53	1	Interr finecorsa ruotino	End wheeled switch		
7	32 51	1	Pressacavo PG 13.5	Gland PG 12.5		
8	35 89	2	Rondella Contact8.2x16x1.4	Bushing Contact 8.2x16x1.4		
9	21 32	2	Dado autobb. basso M 4	Self-locking nut M 4 7474		
10	23 21	2	Vite TE int.fil.UNI 5739	Screw TE int. fil. UNI 5739 M8X16		
11	21 31	2	Vite TCEI UNI5931 M4X30	Screw TCEI UNI 59312 M4X30		
12	22 07	1	Rondella zigrinata Ø 8	Knurled washer Ø 8		
13	63 88	1	Prolunga ingrassatore M8	Greaser extension lead M8/ M6		
14	31 24	1	Ingrassatore M 6 dritto	Straight greasing fitting M 6		
15	23 20	6	Rondella spaccata rinf. Ø 8	Split reinforced washer Ø 8		
16	23 23	6	Vite TE int.fil.UNI 5739	TE screw UNI 5739 M8X25		

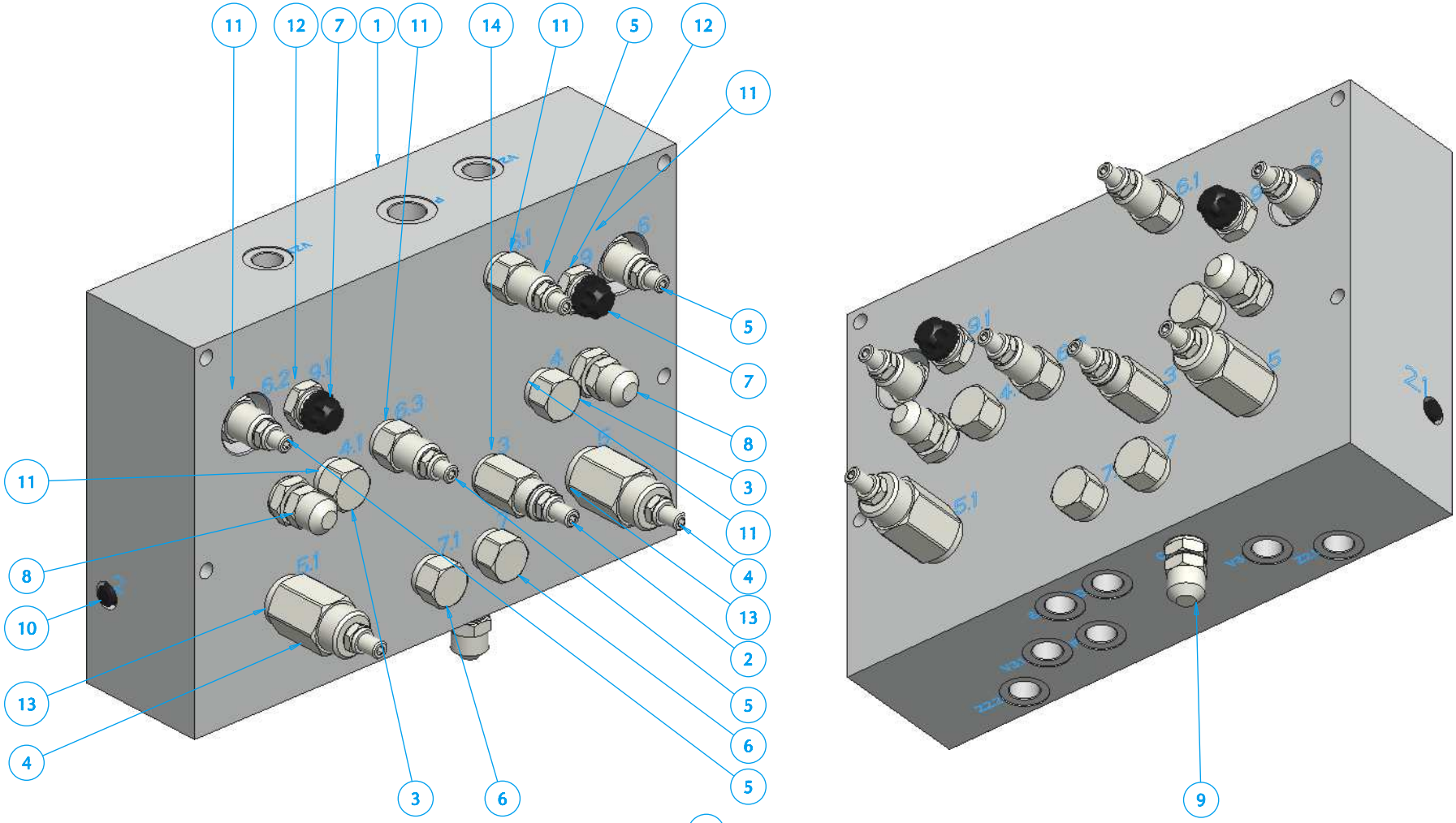

2 = 3 = 3A

3 = 2 = COD. 61 21

3A = 2 = COD. 68 01

RT 1000

ROC

61_12_M

Ref	Code	Qt	*Descrizione*	*Description*	*Designation*	*Beschreibung*
1	R11047-0100	1	Corpo principale	Main body		
2	61 21	1	Cart valvola di sequenza	Sequence valve cartr.		
3	62 39	2	Cart valvola di non ritorno	Check valve cartr.		
4	61 22	2	Cart valvola di sequenza	Sequence valve cartr.		
5	62 38	4	Cart regolatore di flusso	Flow regulator cartr.		
6	62 36	2	Tappo a sede	Housing cap		
7	62 37	2	Cart valvola regolat. flusso	Flow regulator valve cartr.		
8	63 31	2	Prova pressione 3/8 gas	Pressure test 3/8 gas		
9	61 28	1	Prova pressione 1/4 gas	Pressure test 1/4 gas		
10	64 69	2	Cart. valvola unidir VU.LN	Unidirectional valve cartr.		
11	64 01	6	Kit guarnizioni cavità T-13/	Seal set cavity T13		
12	64 00	2	Kit guarnizioni cavità T-8	Seal set cavity T8		
13	64 03	2	Kit guarnizioni cavità T-2	Seal set cavity T2		
14	63 99	1	Kit guarnizioni cavità T11	Seal set cavity T11		

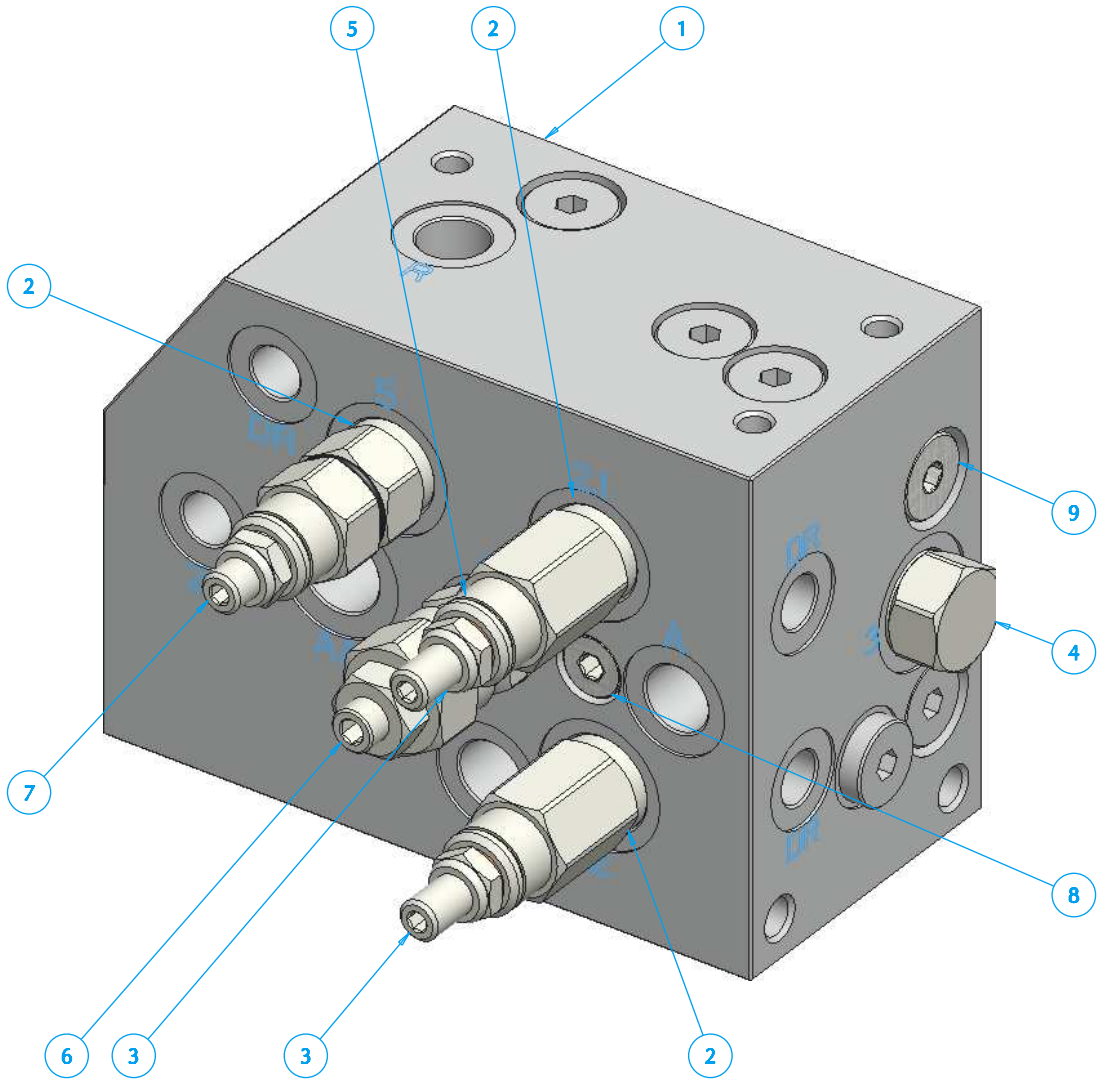
5
2
1
2
9
4
7
8
6
3
3
2

RT 1000

ROC

68_07_M

Ref	Code	Qt	*Descrizione*	*Description*	*Designation*	*Beschreibung*
1	68 07	1	Corpo valvole DX	Right lat. valves syst.		
2	63 99	3	Kit guarnizioni cavità T11	Seal set cavity T11		
3	05 41	2	Cartuccia valvola di sequenza	Sequence valve cartridge		
4	62 59	1	Cartuccia valvola non ritorno	Check valve cartridge		
5	37 73	1	Rondella in alluminio Ø int 12	Aluminum washer Ø int. 12		
6	62 58	1	Cartuccia valvola di massima	Maximum valve cartridge		
7	68 01	1	Cartuccia valvola di bilanciam.	Balancing valve cartridge		
8	36 75	1	Tappo esag. incas. 1/8 gas	Hexagonal cap 1/8 gas		
9	31 53	1	Tappo con esag. incassato 1/4 gas	Drain plug 1/4 gas		

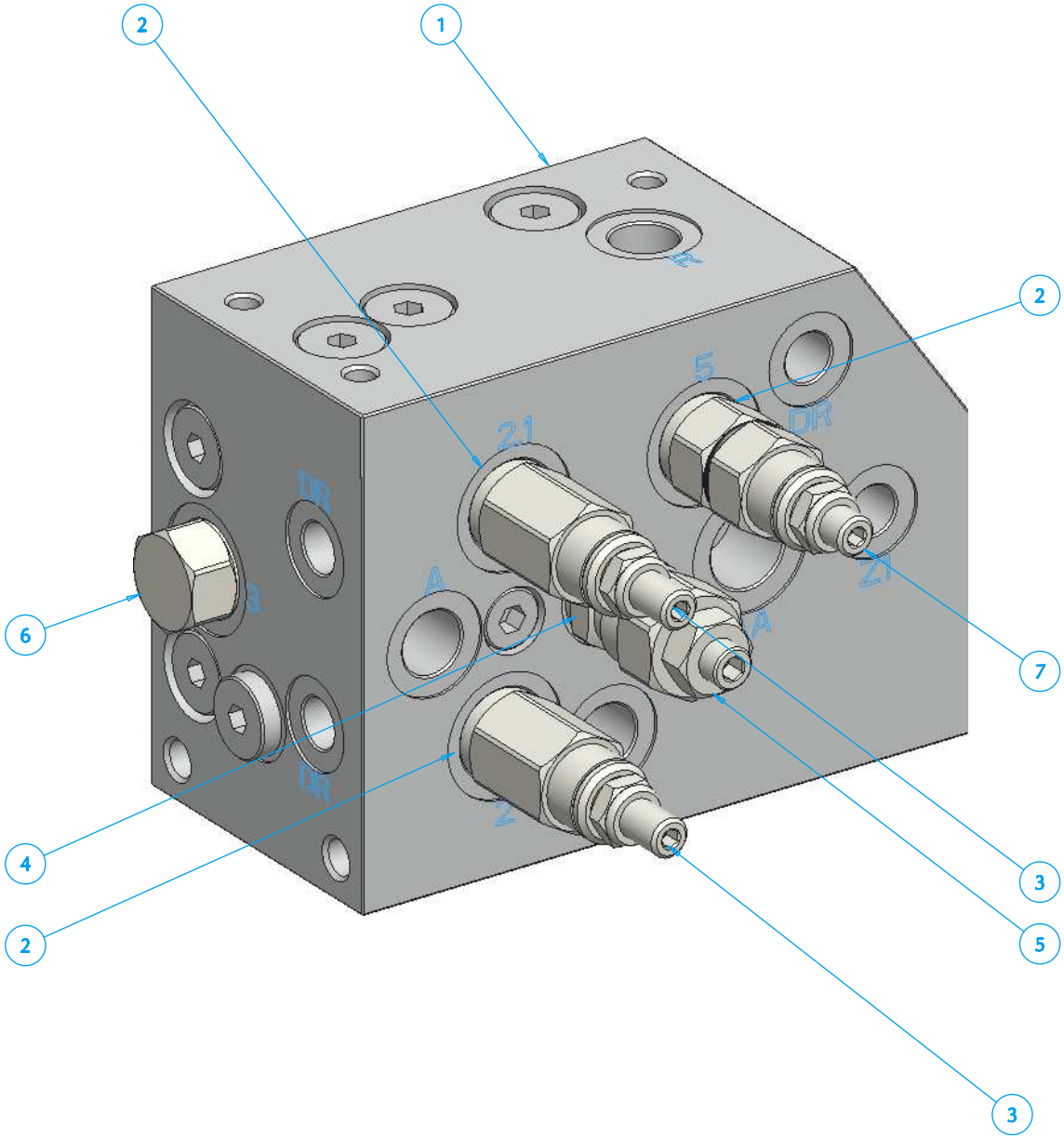
2
1
2
6
7
4
2
3
5
3

RT 1000

ROC

68_08_M

Ref	Code	Qt	Descrizione	Description	Designation	Beschreibung
1	68-08	1	Corpo valvole SX	Left lateral valves system		
2	63 99	3	Kit guarnizioni cavità T11	Seal set cavity T11		
3	05 41	2	Cart valvola di sequenza	Sequence valve cartridge		
4	37 73	1	Rondella in alluminio Ø12	Aluminum washer Ø int. 12		
5	62 58	1	Cart valvola di massima	Maximum valve cartridge		
6	62 59	1	Cart valvola non ritorno	Check valve cartridge		
7	68 01	1	Cart valvola di bilanciam.	Balancing valve cartridge		

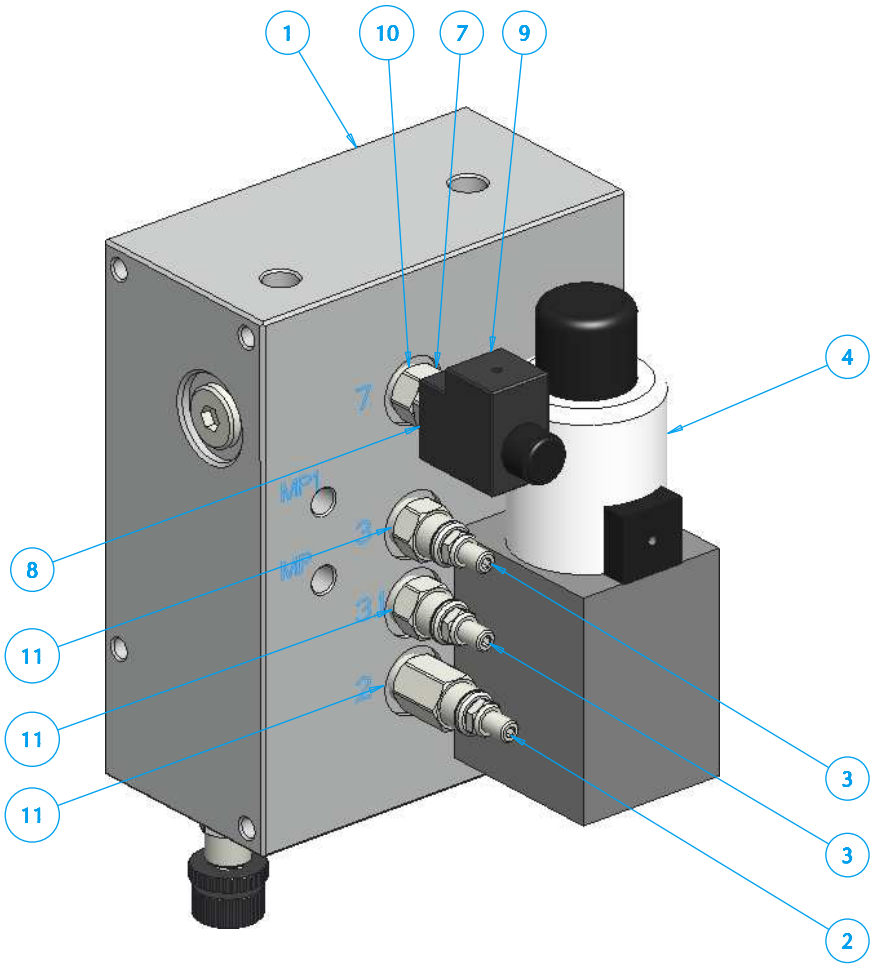
1
10
7
9
4
8
11
11
11
3
3
2

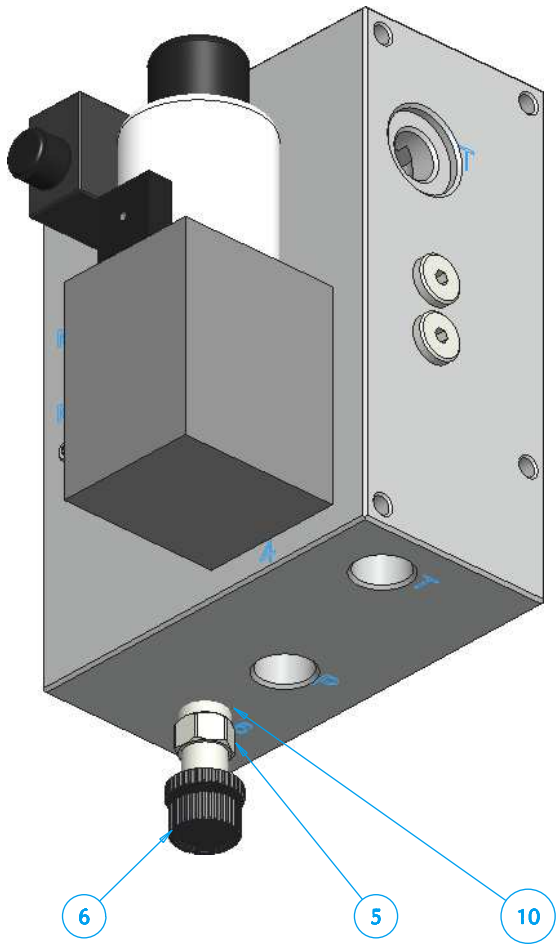
6
5
10

RT 1000

ROC

64_90-M

Ref	Code	Qt	Descrizione	Description	Designation	Beschreibung
1		1	Corpo principale	Main body		
2	05 41	1	Cartuccia valvola di sequenza	Sequence valve cartridge		
3	62 56	2	Cartuccia valvola di massima	Max aeration valve cartridge		
4	62 55	1	Elettrovalvola cetop 05	Electric valve cetop		
5	01 58	1	Cartuccia regolatore di flusso	For bends valve cartridge		
6	05 19	1	Volantino tipo "K"	'K' type flyer		
7	62 33	1	Cartuccia valvola di massima	Max aeration valve cartridge		
8	62 35	1	Elettrovalvola	Electric valve		
9	62 34	1	Bobina 12 VDC	Coil 12 VDC		
10	64 01	2	Kit guarnizioni cavità T-13/T-10	Seal set cavity T13		
11	63 99	3	Kit guarnizioni cavità T11	Seal set cavity T11		

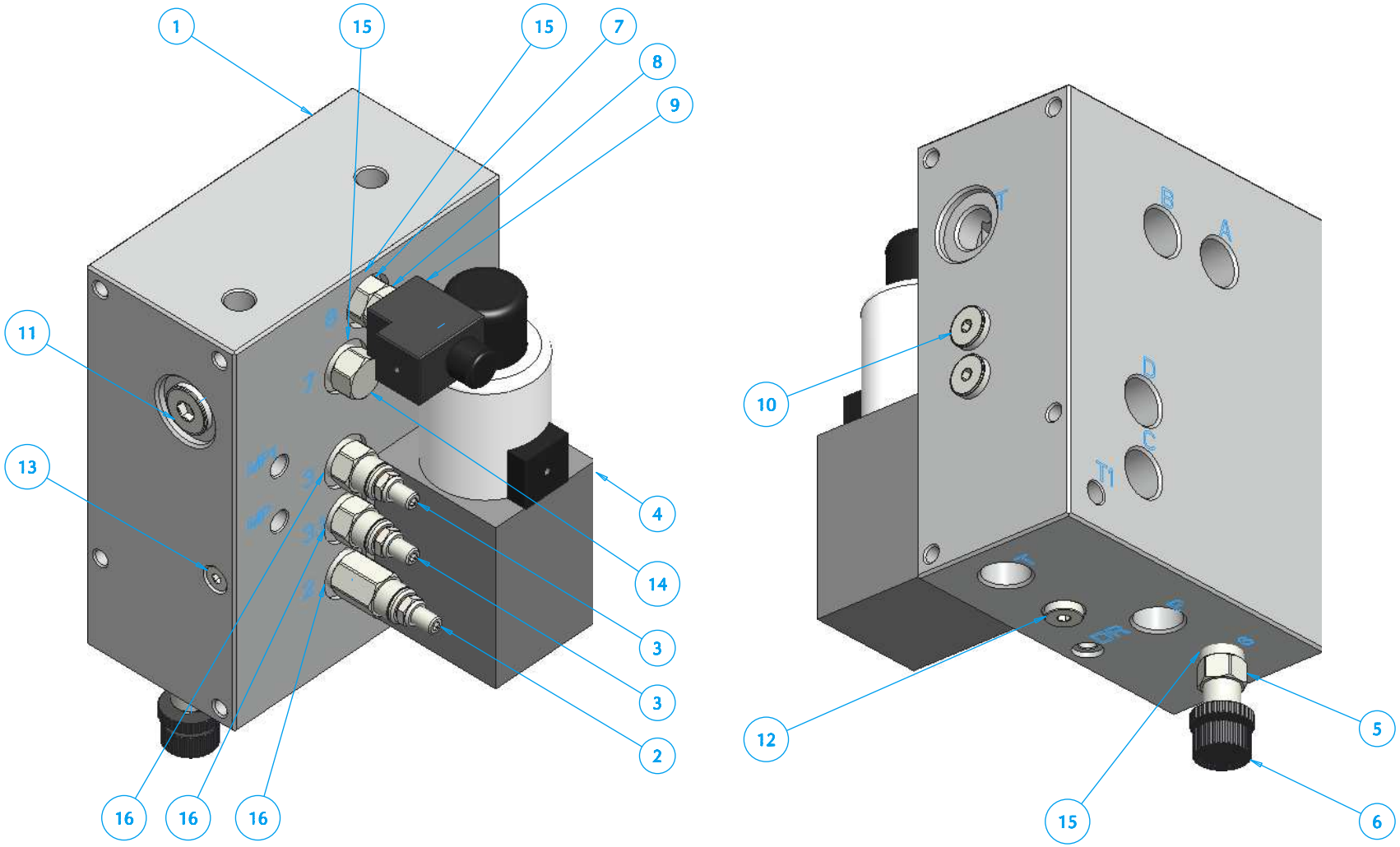
1
15
15
7
8
9
11
13
4
14
3
3
2
16
16
16
10
12
5
15
6
T
B
A
D
C
T1

RT 1000 71_37_M

Ref	Code	Qt	*Descrizione*	*Description*	*Designation*	*Beschreibung*
1		1	Corpo principale	Main body		
2	05 41	1	Cart valvola di sequenza	Sequence valve cartridge		
3	62 56	2	Cart valvola di massima	Max aeration valve cartridge		
4	62 55	1	Elettrovalvola cetop 05	Electric valve cetop		
5	01 58	1	Cart regolatore di flusso	For bends valve cartridge		
6	05 19	1	Volantino tipo "K"	'K' type flyer		
7	69 52	1	Cart valvola direzionale	Directional valve cartridge		
8	62 35	1	Elettrovalvola	Electric valve		
9	62 34	1	Bobina 12 VDC	Coil 12 VDC		
10	31 79	2	Tappo esag. incas. 3/8 gas	Hexagonal oil cap 3/8 gas		
11	35 17	1	Tappo esag. incas. 1/2 gas	Hexagonal plug 3/8 gas		
12	31 53	1	Tappo esag. incas 1/4 gas	Drain plug 1/4 gas		
13	36 75	1	Tappo esag. incas. 1/8 gas	Hexagonal plug 1/8 gas		
14	63 86	1	Tappo a sede	Cap valve seat		
15	64 01	3	Kit guarnizioni cavità T-13	Seal set cavity T13		
16	63 99	3	Kit guarnizioni cavità T11	Seal set cavity T11		

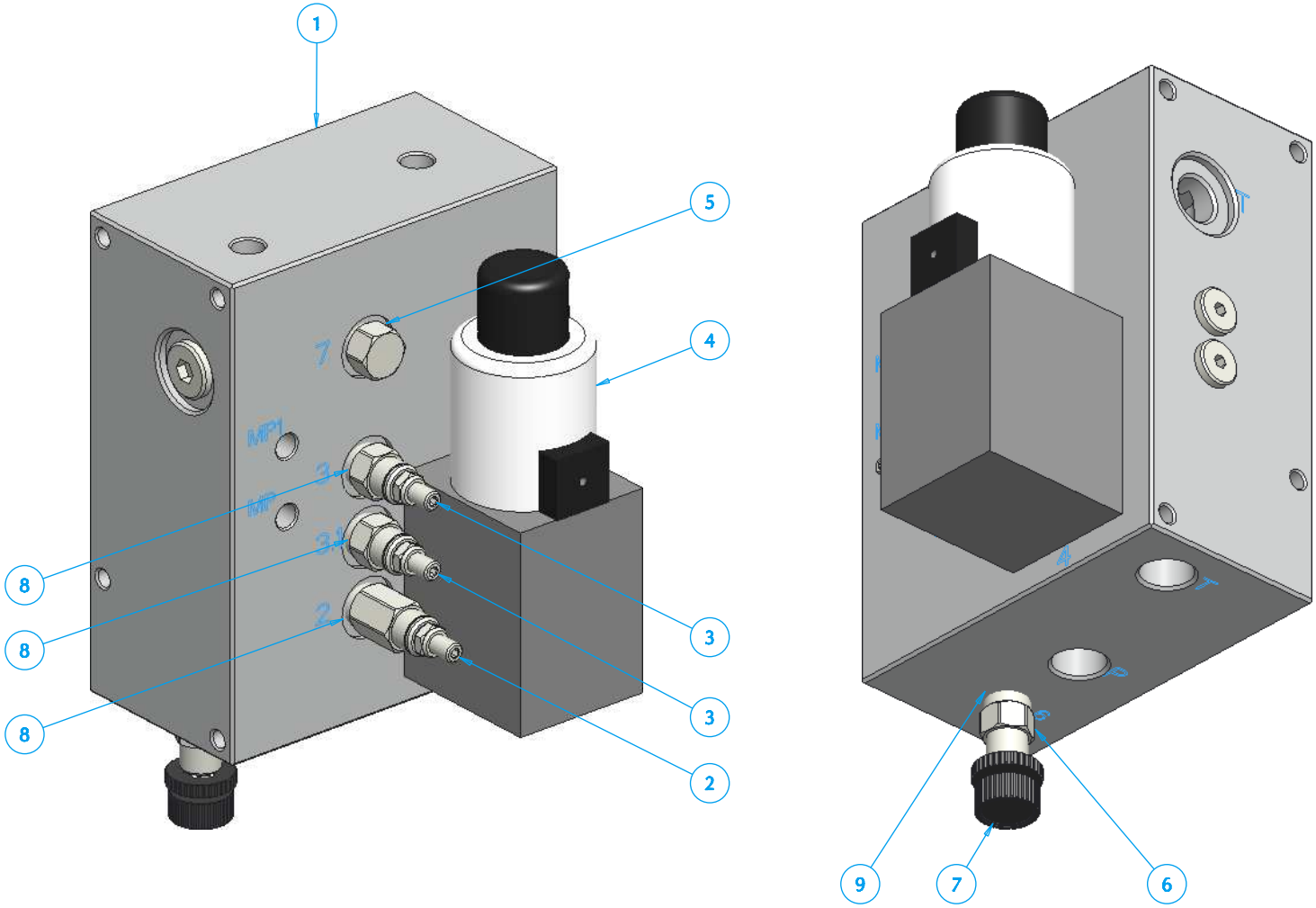
1
5
4
8
8
8
3
3
2
9
7
6

RT 1000

ROC

64_89-M

Ref	Code	Qt	*Descrizione*	*Description*	*Designation*	*Beschreibung*
1		1	Corpo principale	Main body		
2	05 41	1	Cartuccia valvola di sequenza	Sequence valve cartridge		
3	62 56	2	Cartuccia valvola di massima	Max aer. valve cartridge		
4	62 55	1	Elettrovalvola cetop 05	Electric valve cetop		
5	63 86	1	Tappo a sede	Cap valve seat		
6	01 58	1	Cartuccia regolatore di flusso	Bends valve cartridge		
7	05 19	1	Volantino tipo "K"	'K' type flyer		
8	63 99	3	Kit guarnizioni cavità T11	Seal set cavity T11		
9	64 01	1	Kit guarnizioni cavità T-13	Seal set cavity T13		

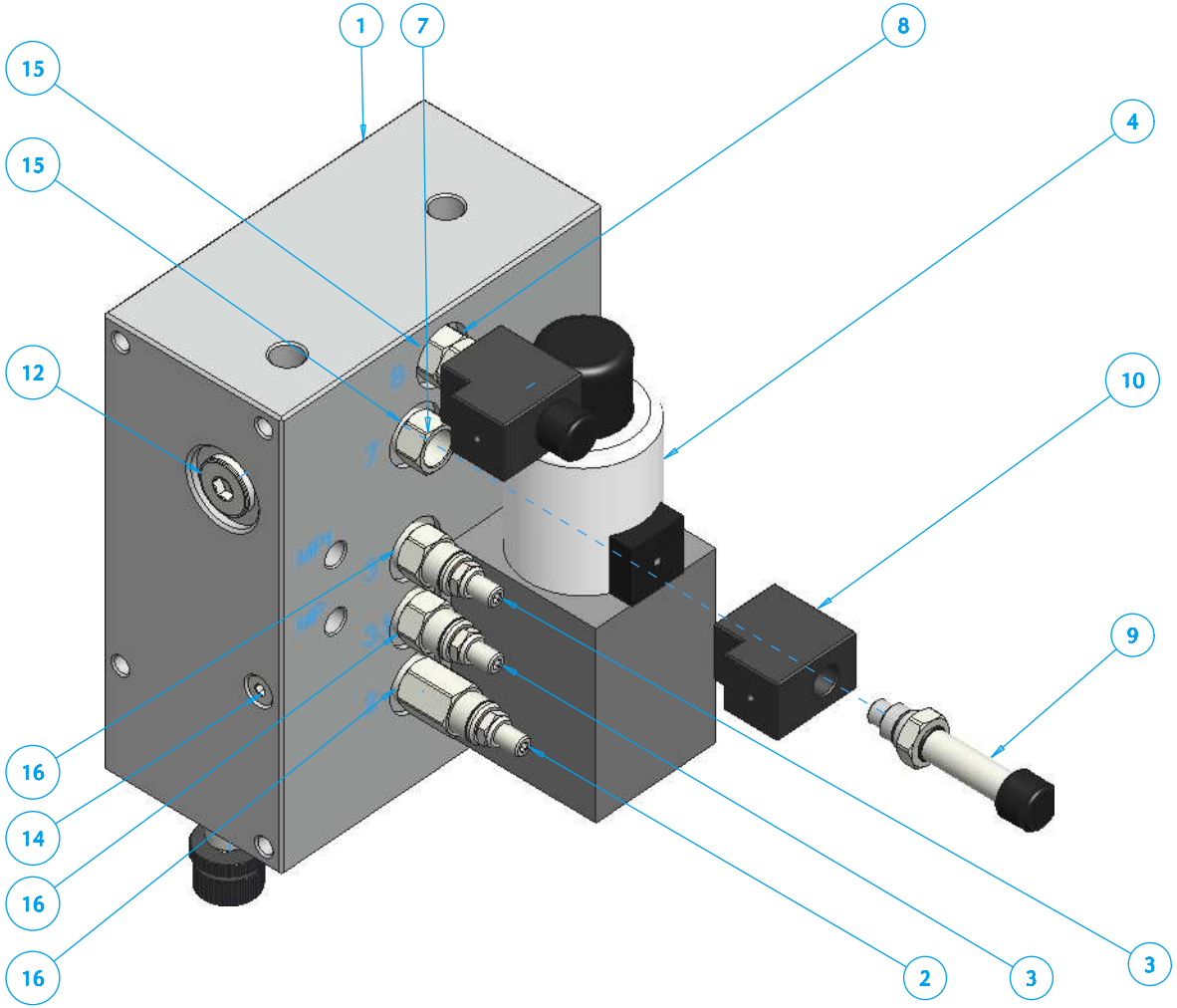
1
7
8
15
15
4
12
10
9
16
14
16
16
2
3
3

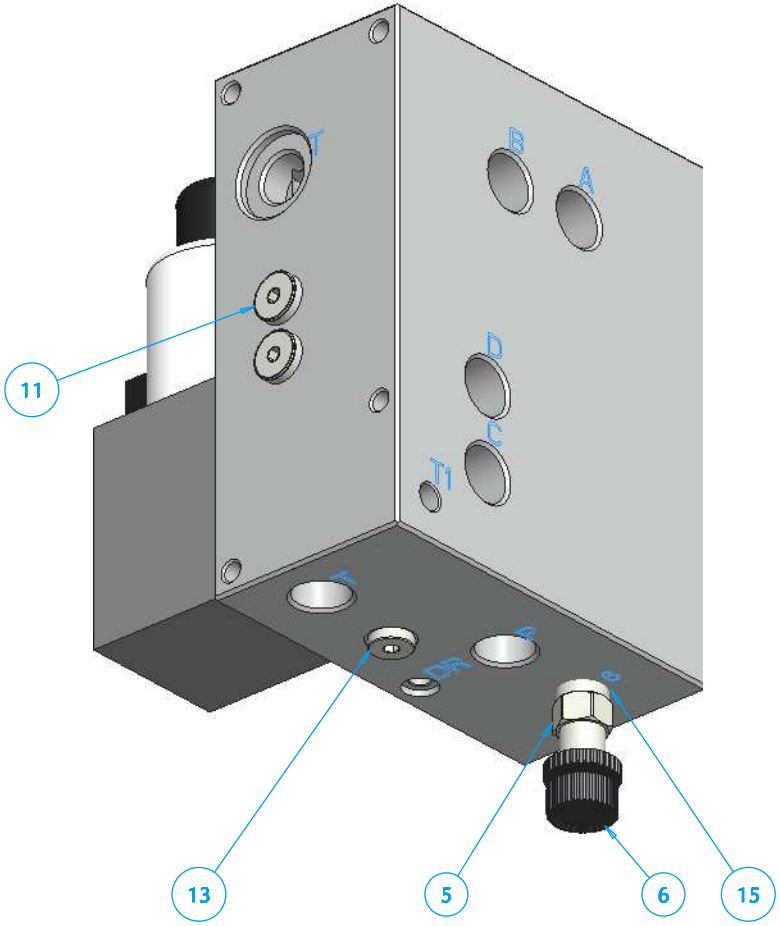
T
B
A
D
C
T1
11
13
5
6
15

RT 1000

ROC

69_35-M

Ref	Code	Qt	Descrizione	Description	Designation	Beschreibung
1		1	Corpo principale	Main frame		
2	05 41	1	Cartuccia valvola di sequenza	Sequence valve cartridge		
3	62 56	2	Cartuccia valvola di massima	Max aer. valve cartridge		
4	62 55	1	Elettrovalvola cetop 05	Electric valve cetop		
5	01 58	1	Cartuccia regolatore di flusso	For bends valve cartridge		
6	05 19	1	Volantino tipo "K"	'K' type flyer		
7	62 33	1	Cartuccia valvola di massima	Max aeration valve cartridge		
8	69 52	1	Cartuccia valvola direzionale	Directional valve cartridge		
9	62 35	2	Elettrovalvola	Electric valve		
10	62 34	2	Bobina 12 VDC	Coil 12 VDC		
11	31 79	2	Tappo esag. incas. 3/8 gas	Hexagonal oil cap 3/8 gas		
12	35 17	1	Tappo esag. incas. 1/2 gas	Hexagonal plug 3/8 gas		
13	31 53	1	Tappo con esag. incassato 1/4	Drain plug 1/4 gas		
14	36 75	1	Tappo esag. incas. 1/8 gas	Hexagonal cap 1/8 gas		
15	64 01	3	Kit guarnizioni cavità T-13	Seal set cavity T13		
16	63 99	3	Kit guarnizioni cavità T11	Seal set cavity T11		

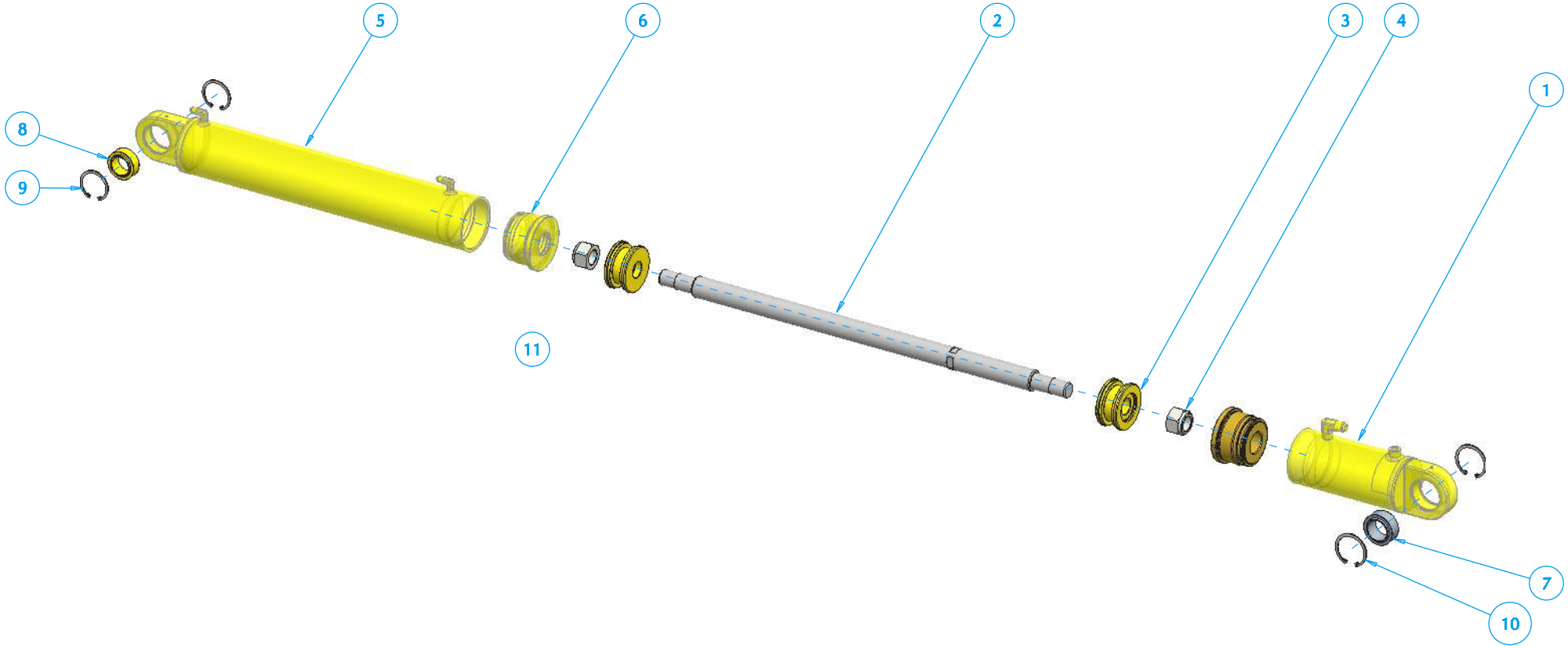
5
6
2
3
4
1
8
9
11
7
10

RT 1000

66_40_M

Ref	Code	Qt	*Descrizione*	*Description*	*Designation*	*Beschreibung*
1	63 57	1	Canna completa Ø 100	Short tube cylinder Ø100		
2	63 56	1	Stelo cromato Ø 45	Cylinder stem Ø45		
3	63 54	2	Pistone per cilindro Ø 100	Cylinder piston Ø100		
4	03 34	2	Dado autobb. alto 33x2 -7473	Self-locking nut 33x2 - 77473		
5	63 58	1	Canna completa Ø 100	Short tube cylinder Ø100		
6	63 55	2	Testata di guida	Head-bush cylinder		
7	32 32	1	Nocciola sfera Ø45 68	Round nut Ø45 68		
8	33 02	1	Nocciola sfera Ø40 62	Round nut Ø40 62		
9	32 29	2	Anello elast. X foro UNI 7437	Ring UNI7437		
10	32 30	2	Anello elast. X foro UNI 7437	Ring UNI V7437		
11	60 37	1	Kit guarnizioni per cilindro	Cyl. seal kit		

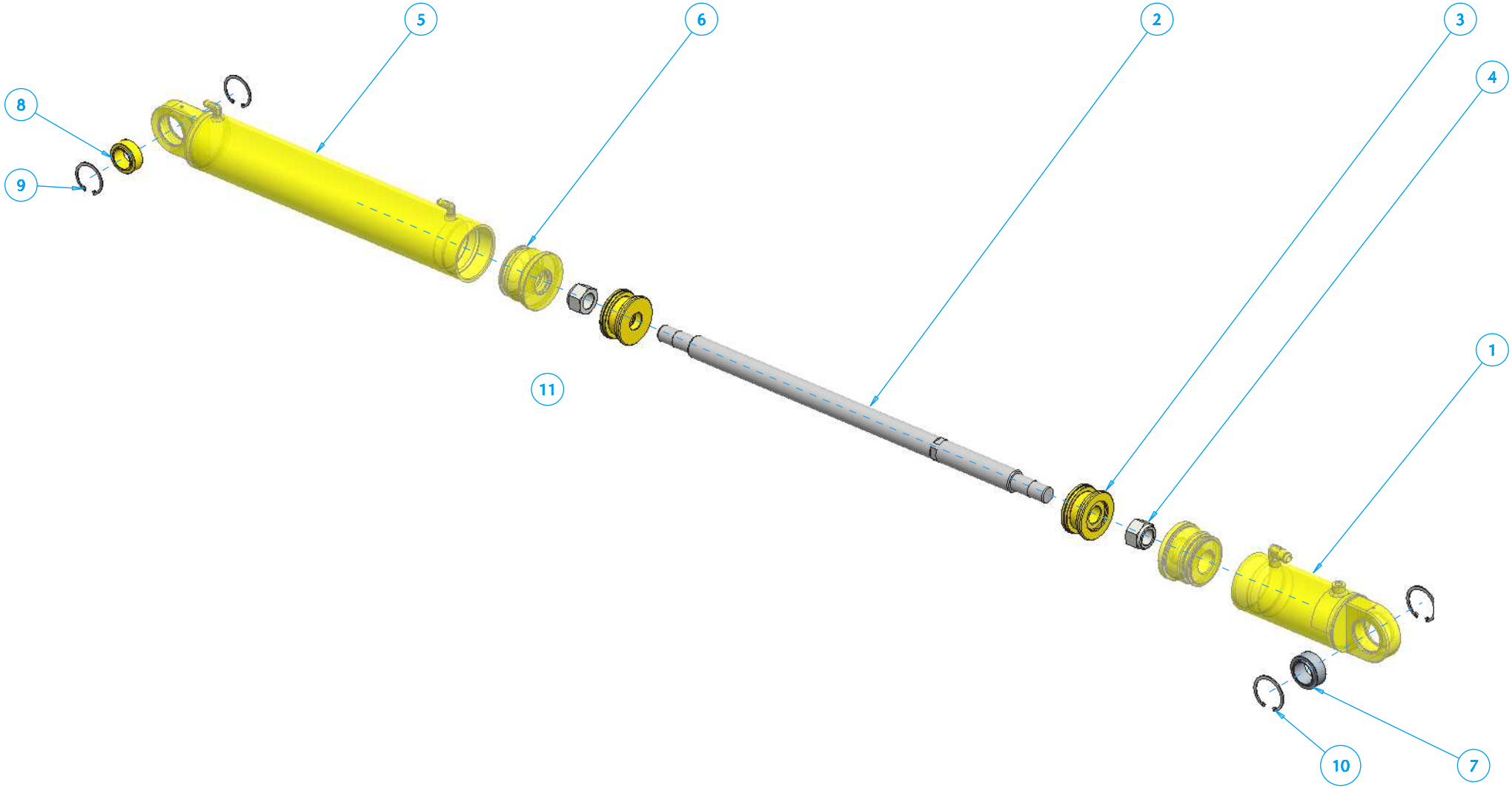
5
6
2
3
4
8
9
1
11
10
7

RT 1000 66 41 M

Ref	Code	Qt	*Descrizione*	*Description*	*Designation*	*Beschreibung*
1	64 83	1	Canna completa Ø 100	Short tubecylinder Ø100		
2	63 56	1	Stelo cromato Ø 45	Cylinder stem Ø45		
3	63 54	2	Pistone per cilindro Ø 100	Cylinder piston Ø100		
4	03 34	2	Dado autobb. alto 33x2	Self-locking nut 33x2 - 77473		
5	63 58	1	Canna completa Ø 100	Short tube cylinder Ø100		
6	63 55	2	Testata di guida	Head-bush cylinder		
7	32 32	1	Nocciola sfera Ø45 68	Round nut Ø45 68		
8	33 02	1	Nocciola sfera Ø40 62	Round nut Ø40 62		
9	32 29	2	Anello elast. X foro UNI	UNI Ring		
10	32 30	2	Anello elast. X foro UNI	UNI ring		
11	60 37	1	Kit guarnizioni per cilindro	Cylinder seal kit		

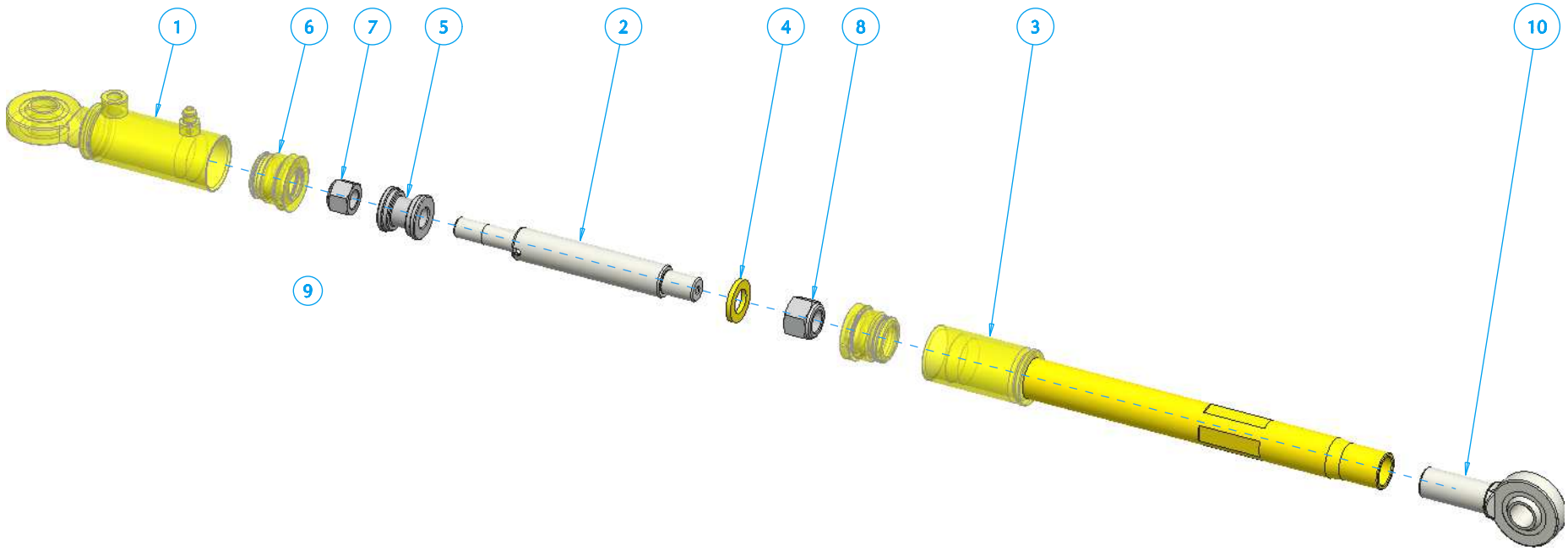
1
6
7
5
2
4
8
3
10
9

RT 1000

ROC

62_85_M

Ref	Code	Qt	*Descrizione*	*Description*	*Designation*	*Beschreibung*
1	63 79	1	Canna completa Ø 45	Short tube cylinder Ø45		
2	63 61	1	Stelo cromato Ø 32	Cylinder stem Ø32		
3	63 80	1	Canna completa Ø 45	Short tube for cylinder Ø45		
4	63 60	1	Rondella a spessore 24x42x5	Washer 24x42x5		
5	63 59	1	Pistone Ø 45	Piston Ø45		
6	63 78	2	Testata Ø 32/45	Head bushing Ø32/45		
7	33 03	1	Dado autobl. alto 20x1.5	Self-locking nut 20x1.5		
8	25 01	1	Dado autobloccante 24x2	Self-locking nut 24x2		
9	63 81	1	Kit guarnizioni cilindro	Seal kit for cylinder		
10	60 48	2	Termfilettato destro Ø 25	Right joint end Ø25		

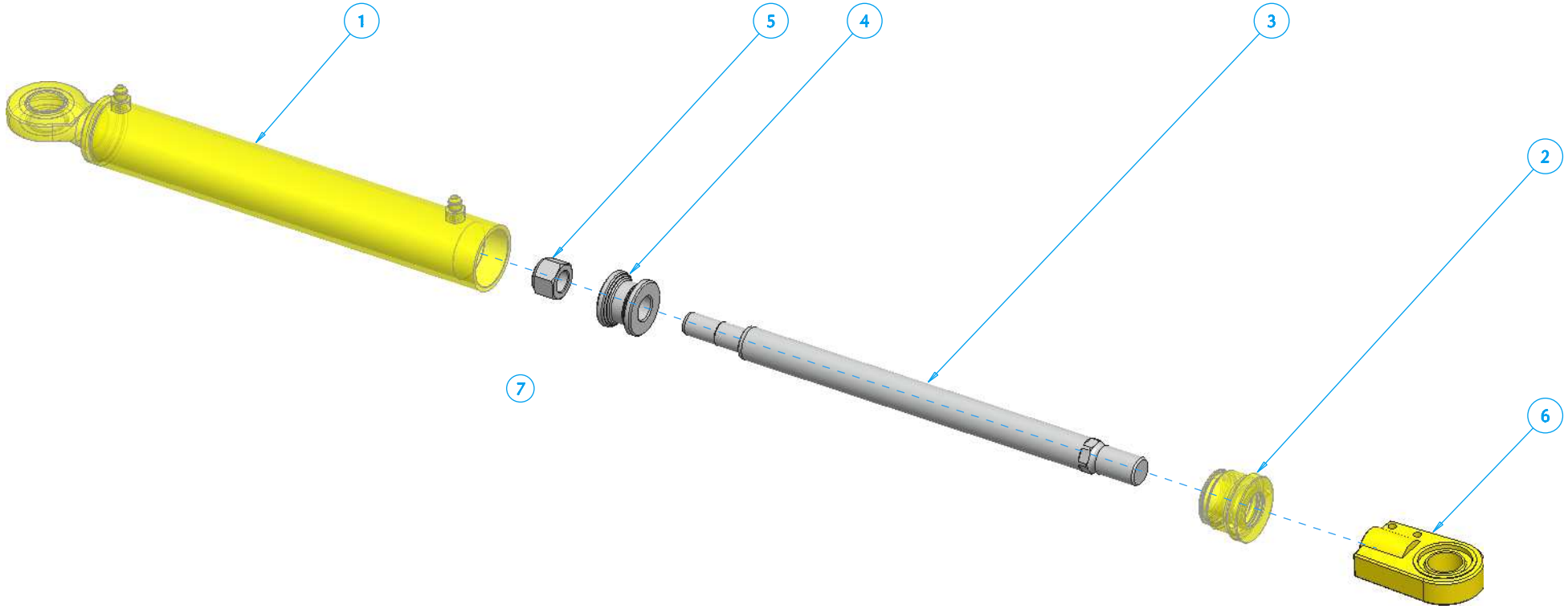
1
5
4
3
2
6
7

RT 1000

ROC

60_32_M

Ref	Code	Qt	Descrizione	Description	Designation	Beschreibung
1	63 52	1	Canna completa Ø 60	Tube for cylinder Ø60		
2	63 50	1	-Testata guida Ø 35/60	Head bushing for cylinder		
3	63 51	1	Stelo cromato Ø 35	Cylinder stem Ø35		
4	63 49	1	Pistone	Piston		
5	25 01	1	Dado autobloccante 24x2	Self-locking nut 24x2		
6	60 46	1	Terminale filettato Ø 30 x 2	Ball joint end Ø 30 x2		
7	60 99	1	Kit guarnizioni cilindro 60_32	Seal kit for cylinder 60_32		

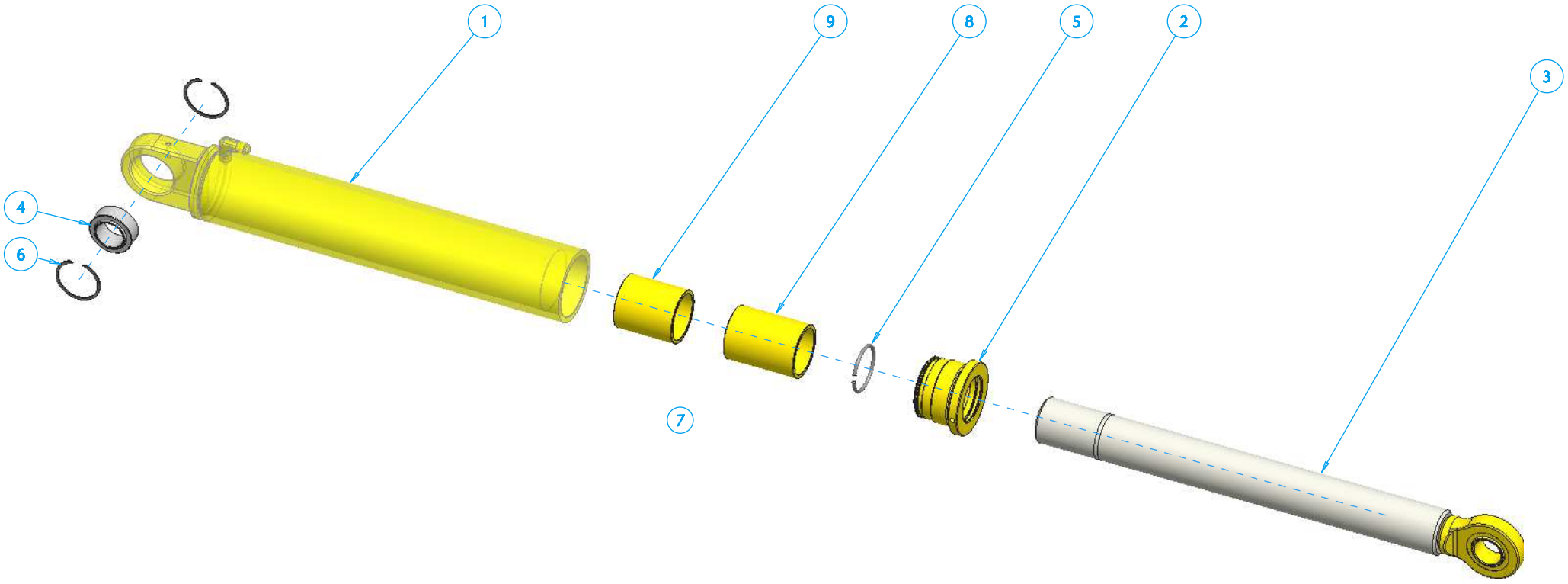
1
9
8
5
2
3
4
6
7

RT 1000

ROC

60_35_M

Ref	Code	Qt	*Descrizione*	*Description*	*Designation*	*Beschreibung*
1	63 47	1	Canna completa Ø 75	Wheel lifter tube Ø 75		
2	63 45	1	Testata guida Ø 56/75	Head bushing for cylinder		
3	63 46	1	Stelo completo Ø 56	Complete stem Ø56		
4	32 34	1	Rotula 35 55 GE35ES	Whirl 35 55		
5	32 28	1	Seger tondo per albero Ø 56	Round seger for shaft Ø56		
6	32 23	2	Seger tipo SB	SB type shaft		
7	60 97	1	Kit guarnizioni per cilindro	Seal kit for cylinder 60_35		
8	70 25	1	Spessore per 60 35	Spacer for 60_35		
9	69 67	1	Spessore per 60 35	Spacer for 60_35		

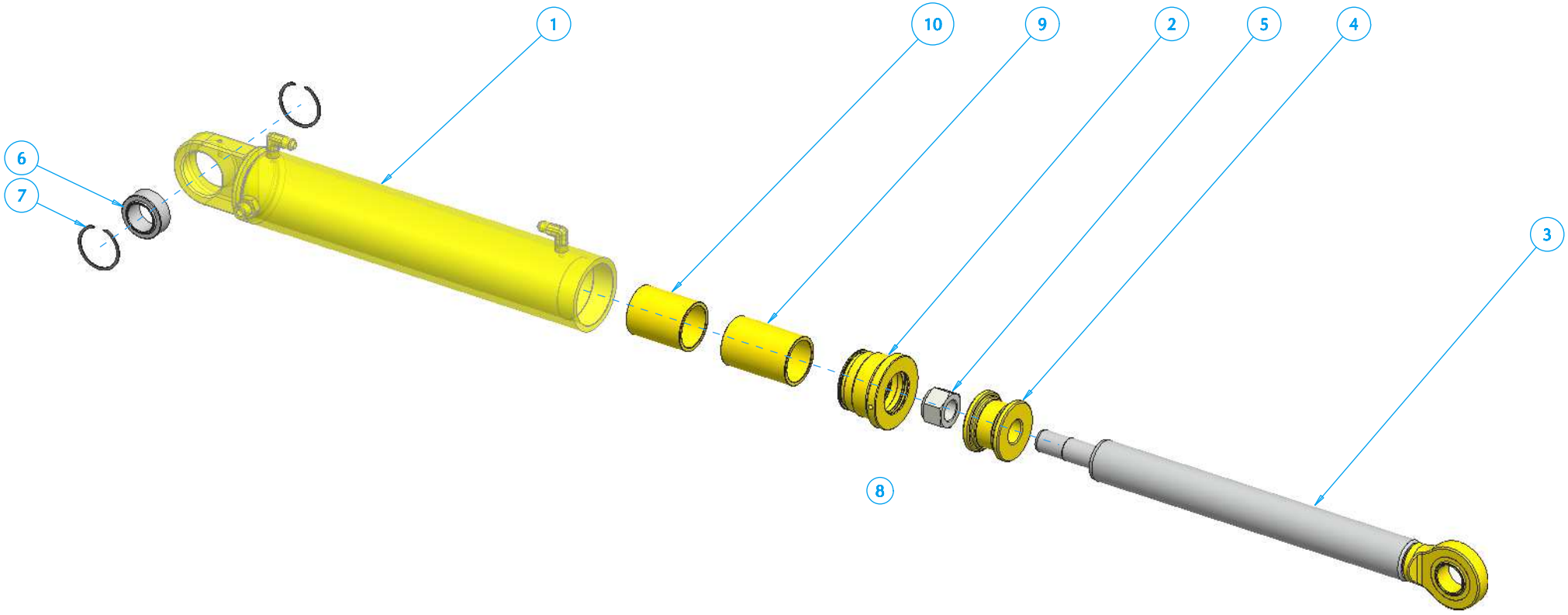
1
10
9
2
5
4
6
7
3
8

RT 1000

ROC

60_33_M

Ref	Code	Qt	Descrizione	Description	Designation	Beschreibung
1	63 42	1	Canna completa Ø 75	Wheel lifter tube Ø75		
2	63 40	1	-Testata guida Ø 50/75	Head bushing cylinder Ø50 / 75		
3	63 41	1	Stelo completo Ø 50	Complete stem Ø75		
4	63 39	1	Pistone per cilindro Ø 75	Piston for cylinder Ø75		
5	23 74	1	Dado autobb. alto 27x2-7473	Self-locking nut		
6	32 34	1	Rotula 35 55 GE35ES	Whirl 35 55		
7	32 23	2	Seger tipo SB	SB type shaft		
8	60 38	1	Kit guarnizioni per cilindro	Seal kit for cylinder 60_33		
9	70 26	1	Spessore per 60 33	Spacer for 60_33		
10	69 68	1	Spessore per 60 33	Spacer for 60_33		

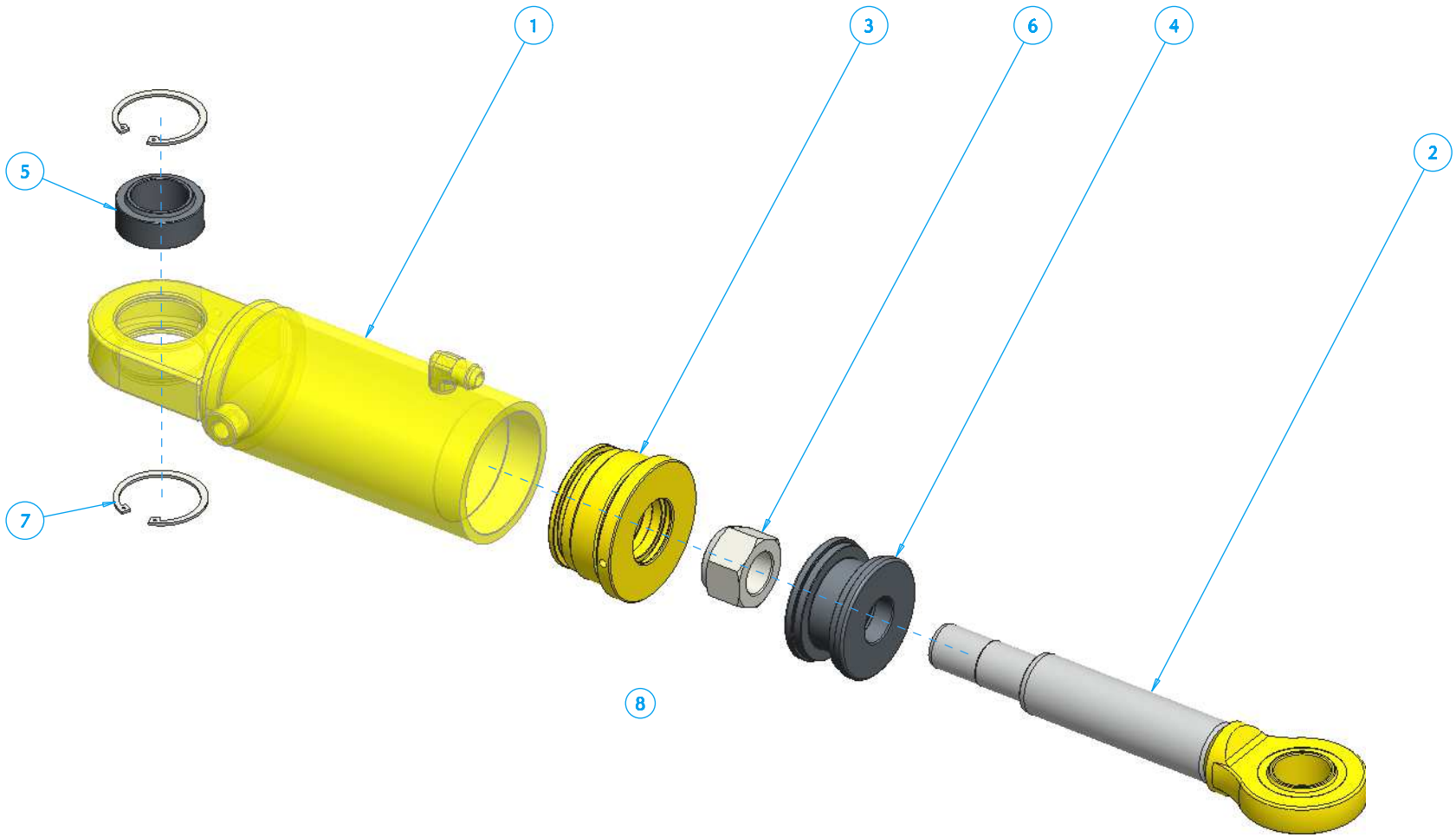
1
3
6
4
2
5
7
8

RT 1000

ROC

68_00_M

Ref	Code	Qt	*Descrizione*	*Description*	*Designation*	*Beschreibung*
1	63 37	1	Canna completa Ø 90	Pipe for cent.cylinder Ø90		
2	68 06	1	Stelo completo Ø 45	Complete stem Ø45		
3	66 58	1	Testata guida Ø 45-90	Head bushingcylinder Ø45		
4	66 57	1	Pistone per cilindro Ø 90	Piston for cylinder Ø90		
5	33 02	1	Nocciola sfera Ø40 62	Round nut Ø40 62		
6	03 34	1	Dado autobb. alto 33x2 -7473	Self-locking nut 33x2		
7	32 29	2	Anello elast. X foro UNI 7437	7437UNI ring		
8	66 61	1	Kit guarnizioni per cilindro	Seal kit for cylinder		

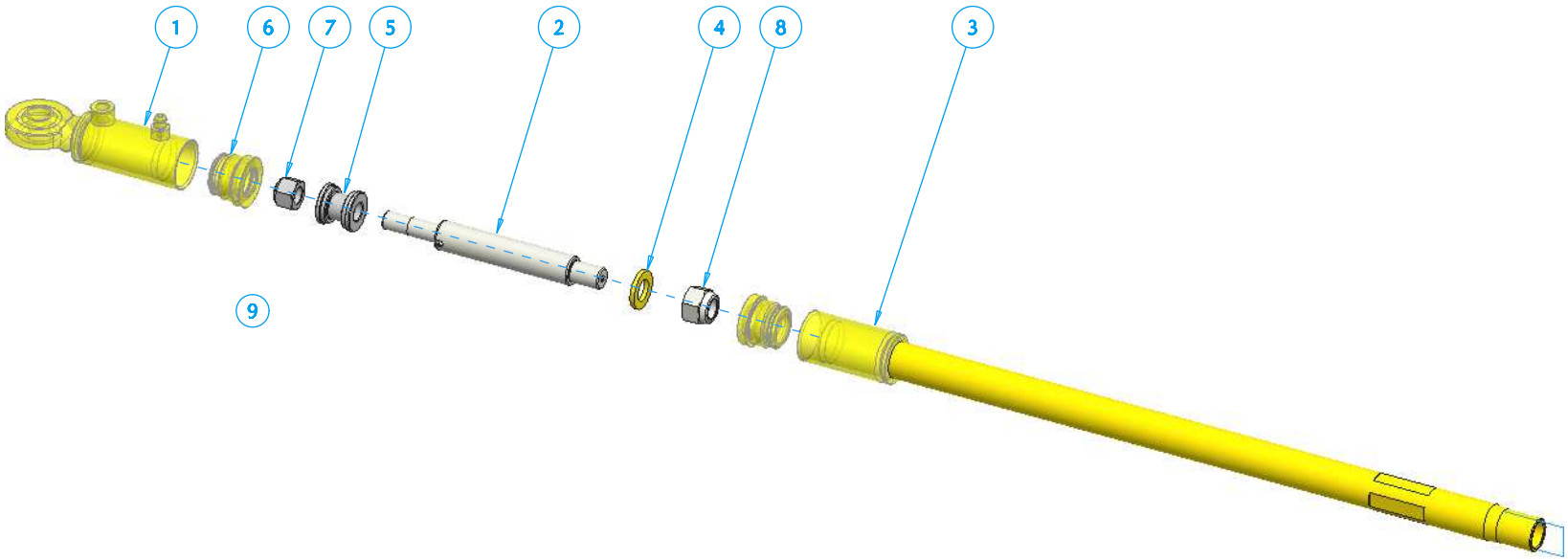
1
6
7
5
2
4
8
3
9

RT 1000

ROC

66_39_M

Ref	Code	Qt	Descrizione	Description	Designation	Beschreibung
1	66 47	1	Canna completa Ø 45	Pipe for cylinder Ø45		
2	63 61	1	Stelo cromato Ø 32	Chromed stem Ø32		
3	66 46	1	Canna completa Ø 45	Balancing pipe Ø45		
4	63 60	1	Rondella a spessore 24x42x5	Washer 24x42x5		
5	63 59	1	Pistone Ø 45	Piston Ø45		
6	63 78	2	Testata Ø 32/45	Head bushing Ø32/45		
7	33 03	1	Dado autobl. alto 20x1.5	Self-locking nut 20x1.5		
8	25 01	1	Dado autobb. alto 24x2-7473	Self-locking nut 24x2		
9	63 81	1	Kit guarnizioni cilindro	Seal kit for cylinder		

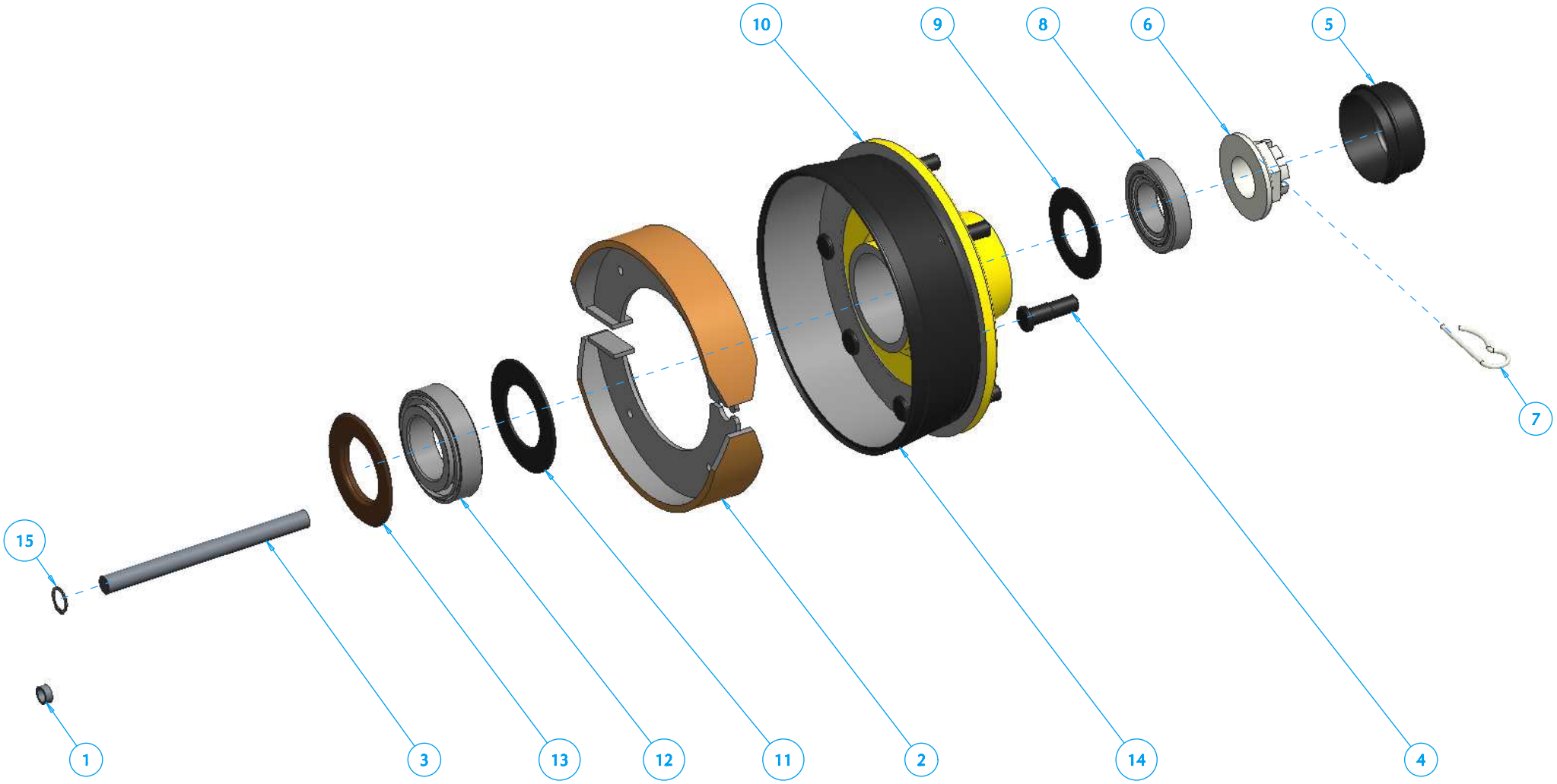
10
9
8
6
5
7
15
1
3
13
12
11
2
14
4

RT 1000

ROC

R11002-0001_M

Ref	Code	Qt	*Descrizione*	*Description*	*Designation*	*Beschreibung*
1	62 43	1	Leva per comando idraulico	Hydraulic controller lever		
2	62 42	1	Ganasce frenanti per mozzo	Hub brakes shoes		
3	62 41	1	Perno a oliva per freno	Pin for brakes		
4	62 48	8	Colonnetta ruota Ø 18x1.5	Stud for wheel		
5	62 47	1	Coperchio a pressione	Pressure cover		
6	32_58	1	Dado a corona per mozzo	Crown nut		
7	62 46	1	Coppiglia per mozzo ruota	Wheel hub cotter pin		
8	62_45	1	Cuscinetto a rulli conici 32211	Roller pad		
9	62 44	1	Anello di tenuta	Holding ring		
10	62 53	1	Flangia mozzo ruota	Wheel hub flange		
11	62 52	1	Anello di tenuta	Holding ring		
12	62 51	1	Cuscinetto a rulli conici 32214	Roller pad		
13	62 50	1	Anello di tenuta	Holding ring		
14	62_49	1	Tamburo per freno ruota	Wheel drum		
15	32 18	1	Seger i Ø 25x1.2 UNI 7435	Seger I Ø25x1.2		

RT 1000

ROC

R11002-0002_M

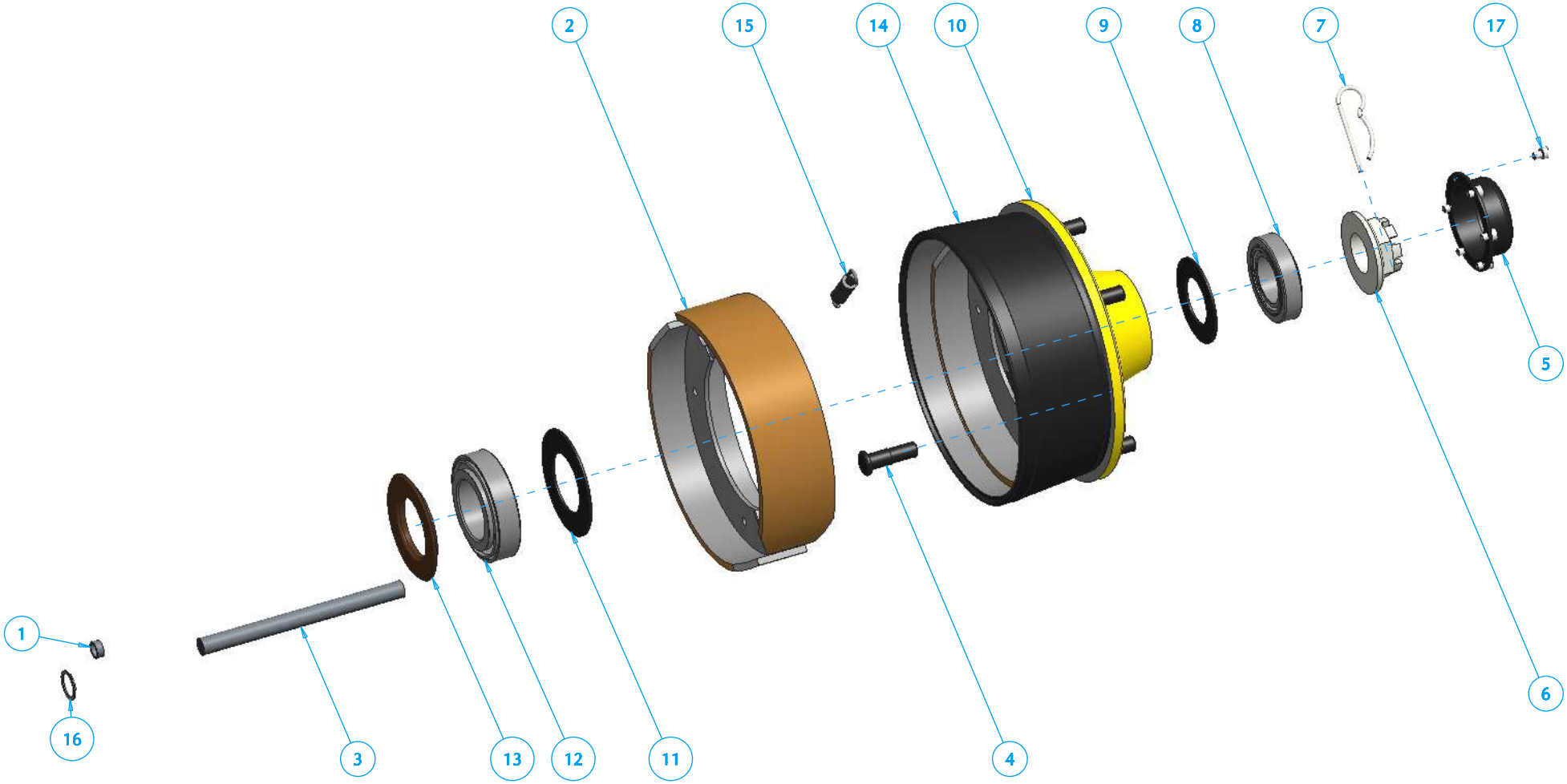

RT 1000

ROC

R11002-0002 M

Ref	Code	Qt	*Descrizione*	*Description*	*Designation*	*Beschreibung*
1	62 43	1	Leva per comando idraulico	Hydraulic controller lever		
2	62 42	2	Ganasce frenanti per mozzo	Hub brakes shoes		
3	62 41	1	Perno a oliva per freno	Pin for brakes		
4	68 80	8	Colonnetta ruota Ø 18x1.5	Wheel stud Ø 18x1.5		
5	68 88	1	Coperchio mozzo ruota	Cover wheel hub		
6	32_58	1	Dado a corona per mozzo	Crown nut		
7	62 46	1	Coppiglia per mozzo ruota	Wheel hub cotter pin		
8	62_45	1	Cuscinetto a rulli conici	Roller pad		
9	62 44	1	Anello di tenuta	Holding ring		
10	62 53	1	Flangia mozzo ruota	Wheel hub flange		
11	62 52	1	Anello di tenuta	Holding ring		
12	62 51	1	Cuscinetto a rulli conici	Roller pad		
13	62 50	1	Anello di tenuta	Holding ring		
14	62_49	1	Tamburo per freno ruota	Wheel drum		
15	68 87	1	Molla per ganasce frenanti	Hub brakes shoes spring		
16	31 20	1	Seger i 30x1.5 UNI 7435	Seeger I 30x1.5 UNI 7435		
17	34 32	6	VITE TCEI UNI5931 M8X10	Screw CEI UNI5931 M8X10		

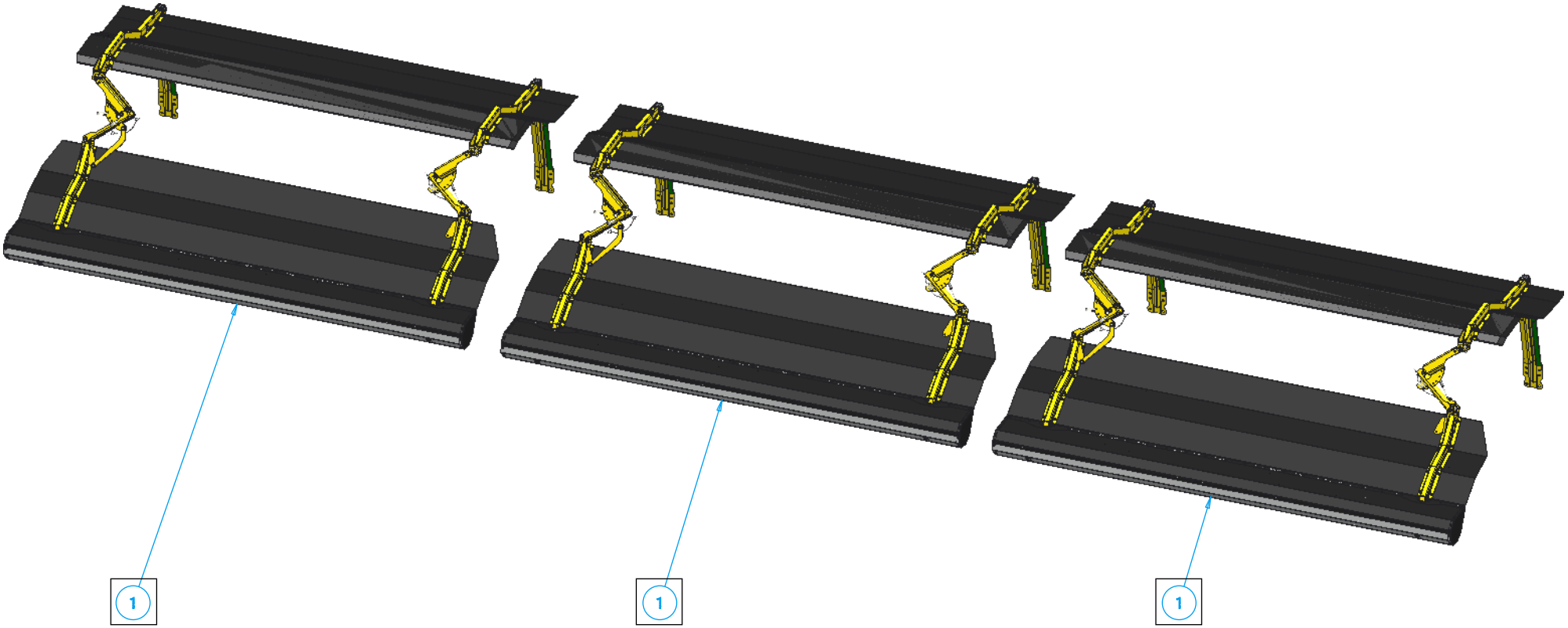
1
1
1

RT 1000

69_63

Ref	Code	Qt	Descrizione	Description	Designation	Beschreibung
1	69 66	3	Kit copertura pick-up 3 Mt	Pick up cover kit 3 Mt		

RT 1000

ROC

R13121-0000-M1

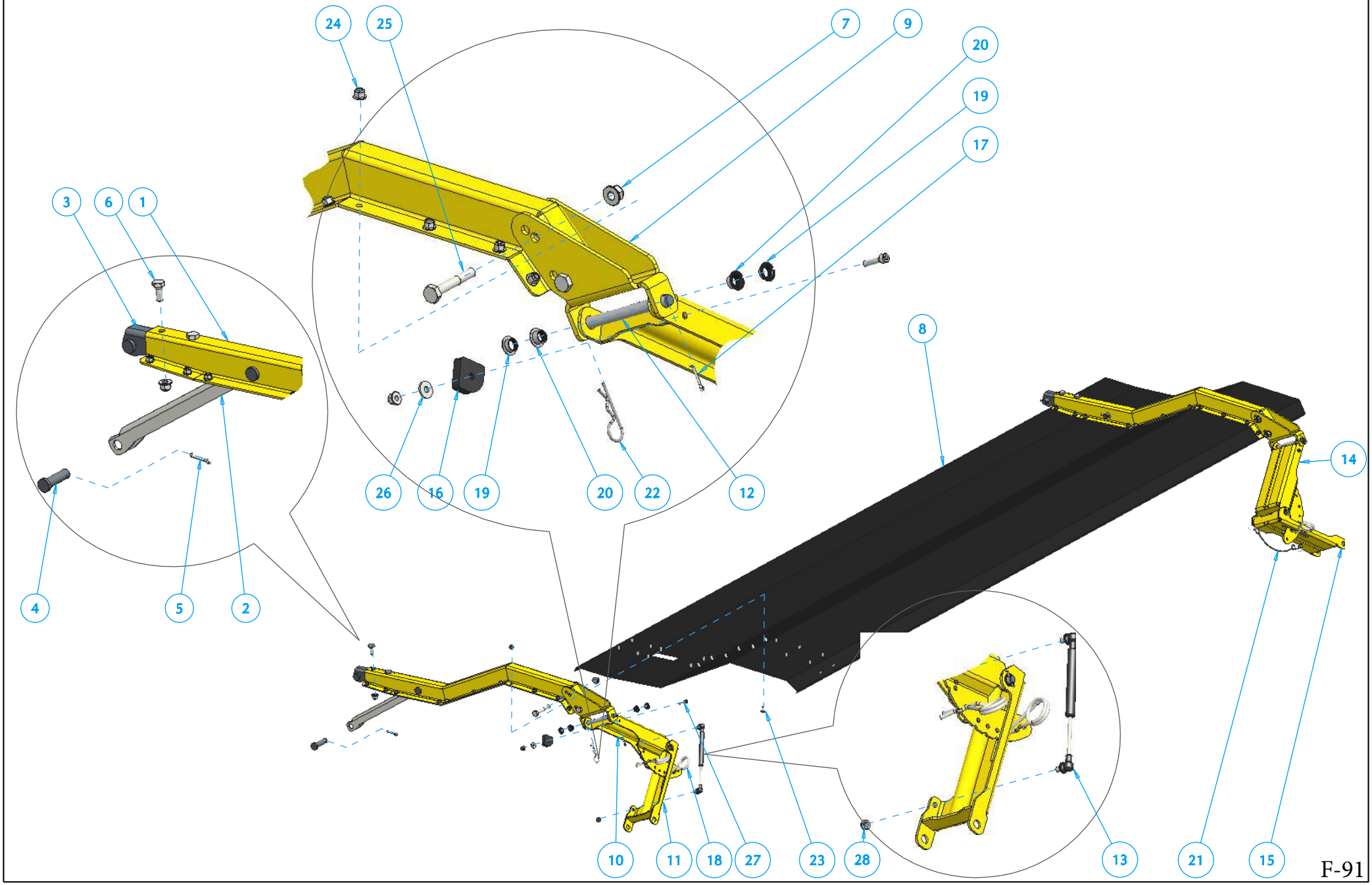

RT 1000 R13121-0000-M1

Ref	Code	Qt	Descrizione	Description	Designation	Beschreibung
1	69 75	2	Braccio cop. superiore	Top arm cover for 69 66		
2	69 77	2	Puntello per copertura	Cover prop		
3	69 78	2	Terminale per cop.	Cover terminal		
4	69 74	6	Perno Ø16x53	Pin Ø16x53		
5	36 93	6	Copiglia UNI 1336 5X25	Splint UNI 1336 5x25		
6	26 81	4	Vite TE int.fil.UNI 5739	Screw TE int. fil. UNI 5739 M10x25		
7	22 29	8	Dado autobb. flangiato 10	Flanged self-locking nut 106926		
8	69 76	1	Copertura sup. per 69 66	Top cover for 69 66		
9	69 79	2	Assieme portabr.superiore	Assembly upper arm support		
9a	73 11	2	P. braccio cop. sup.	Arm support holder		
9b	73 12	1	P. braccio cop. agg.	Arm support connection		
9c	36 83	2	Rondella 39x13x4	Washer 39x13x4		
9d	38 04	2	Boccola 8x12x12.5	Bushing 8x12x12.5		
9e	23 25	2	Vite 8x35	Screw 8x35		
9f	16 98	2	Dado autoblocc.8ma	Self-locking nut 8ma		
9g	38 05	2	Rondella 30x13x4	Washer 30x13x4		
9h	22 07	2	Rondella zincata	Galvanized washer		
9i	73 13	2	Porta braccio cop. rond.	Arm-holder bushing cover		
10	69 83	1	Braccio leva superiore destro	Upper right support lifting arm		
11	69 85	1	Braccio leva inferiore destro	Lower right support lifting arm		
12	69 72	4	Perno Ø 12x135.5 cromato	Chromed pin Ø12x135.5		
13	37 54	2	Cilindro ammortizzante	Shock absorbing cylinder		
14	69 84	1	Braccio leva superiore sin	Upper left support lifting arm		
15	69 86	1	Braccio leva inferiore sin	Lower left support lifting arm		
16	69 71	2	Gommino di battuta	Hitting O-ring		
17	36 94	6	Copiglia UNI 1336 3.2X20	Splint UNI 1336 3.2x20		
18	20 84	3	Coppiglia Ø 6 ar	Splint Ø6		
19	36_90	8	Boccola in acciaio Ø12x14 h6	Inox bushing Ø12x14		
20	37_33	8	Boccola in acciaio Ø12x14 h9	Inox bushing Ø12x14		
21	36 91	2	Tirante in gomma per coppiglie	Rubber draught for splints		
22	36 95	2	Coppiglia a R Ø 3	R splint Ø3		
23	34 49	44	Vite button flang. Ø 6x16	Flanged button screw Ø 6x16		
24	25 22	46	Dado autobl.flangiato M6 6926	Flanged self-locking nut M6 6926		
25	25 85	4	Vite TE parz.fil.UNI5737	Screw TE UNI5737		
26	24 39	1	Rondella piana 6.5x18x2	Flat washer 6.5x18x2		
27	25 64	2	Vite TCEI UNI5931 M6X25	Screw TCEI UNI5931		
28	23 42	4	Dado autobb. basso M 8 7474	Self-locking nut M8 7474		

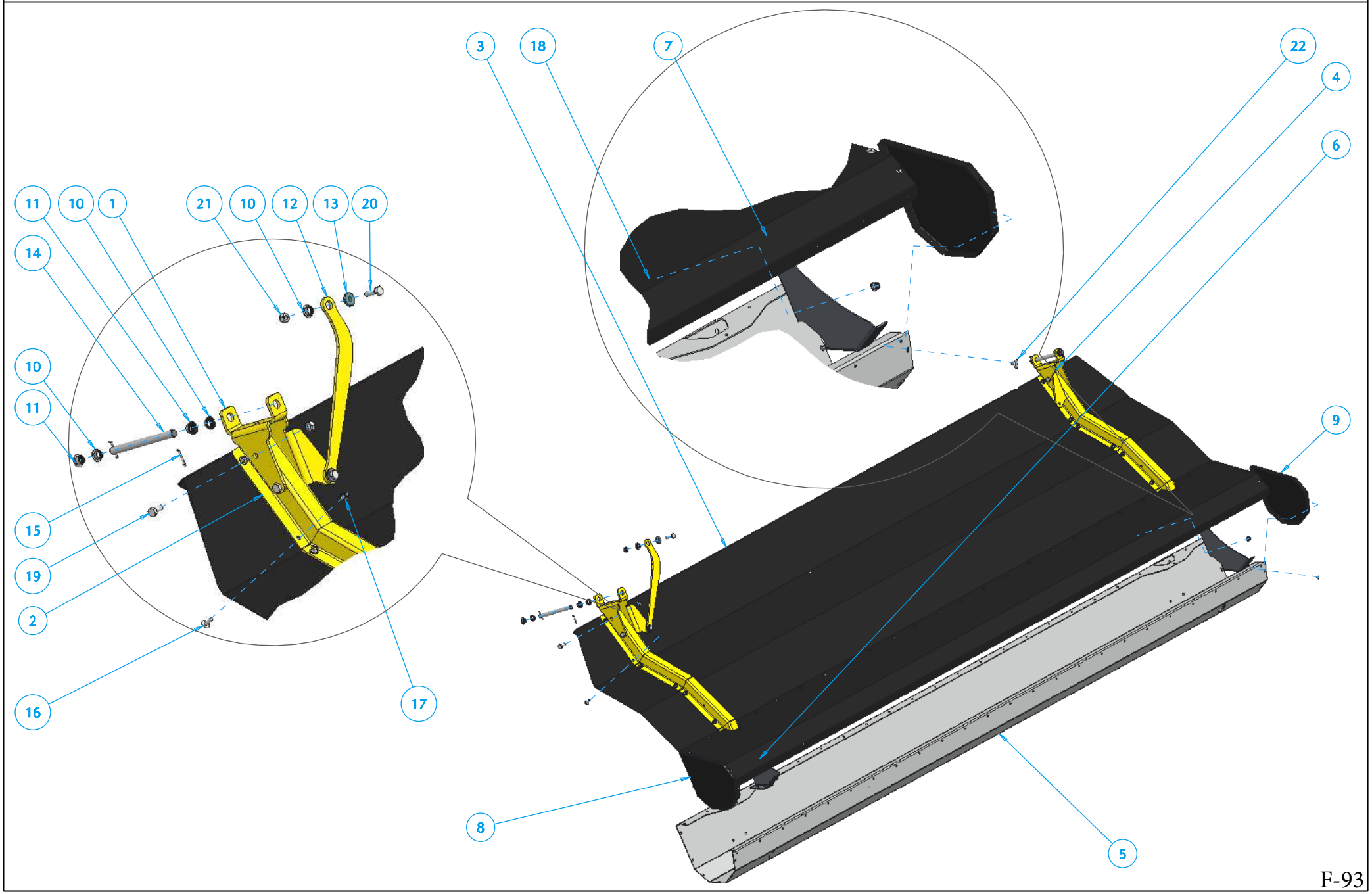
3
18
7
22
4
6
11
10
1
21
10
12
13
20
14
10
11
9
15
19
2
16
17
8
5

RT 380, RT 1000 R13121-0000-M2

Ref	Code	Qt	*Descrizione*	*Description*	*Designation*	*Beschreibung*
1	69 80	1	Porta braccio inferiore destro	Lower right arm support		
2	69 88	2	Braccio inferiore cop.	Lower right arm cover		
3	69 89	1	Copertura inferiore per 69 66	Lower cover for 69 66		
4	69 81	1	Porta braccio inferiore sinistro	Lower left arm support		
5	69 90	1	Copertura frontale	Frontal cover		
6	69 91	1	Nervatura per copertura dx	Ribs for right covering		
7	69 94	1	Nervatura per copertura sx	Ribs for left covering		
8	69 92	1	Coperchio per copertura dx	Cover for right covering		
9	69 93	1	Coperchio per copertura sx	Cover for left covering		
10	36_90	6	Boccola in acciaio Ø12x14 h6	Inox bushing Ø12x14		
11	37_33	4	Boccola in acciaio Ø12x14 h9	Inox bushing Ø12x14		
12	69 87	1	Biella di rinvio	Rod pulley		
13	69 73	2	Boccolina flangiata Ø8x12	Flanged bushing Ø8x12		
14	69 72	2	Perno Ø 12x135.5 cromato	Chromed pin Ø12x135.5		
15	36 94	4	Copiglia UNI 1336 3.2X20	Splint UNI 1336 3.2x20		
16	34 49	28	Vite button flang. Ø 6x16	Fl.button screw Ø 6x16		
17	25 22	32	Dado autobl.flangiato M6 6926	Fl.self-locking nut M6		
18	33 11	4	Vite button flang. Ø 6x20	Flanged screw Ø6x20		
19	23 22	8	Vite TE int.fil.UNI 5739 M8X20	TE screw UNI 5739 M8X20		
20	23 23	2	Vite TE int.fil.UNI 5739 M8X25	TE screw UNI 5739 M8X25		
21	29 30	10	Dado autobb. alto M 8 7473	Self-locking nut M6 6926		
22	33 61	78	RIVETTO TESTA LARGA 5X10X14	Rivet UNI 9200-A 5X12		

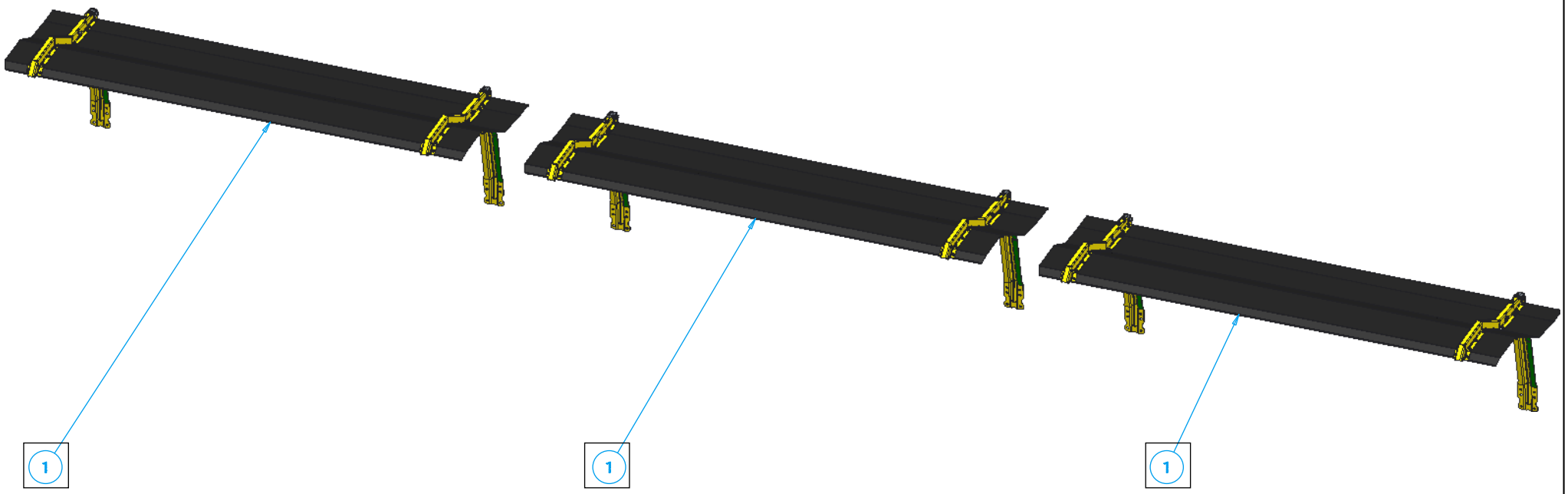
1
1
1

RT 1000

70_14-M

Ref	Code	Qt	Descrizione	Description	Designation	Beschreibung
1	70 13	3	Kit copertura pick-up sup	Upp.over pick-up kit 3 mt.		

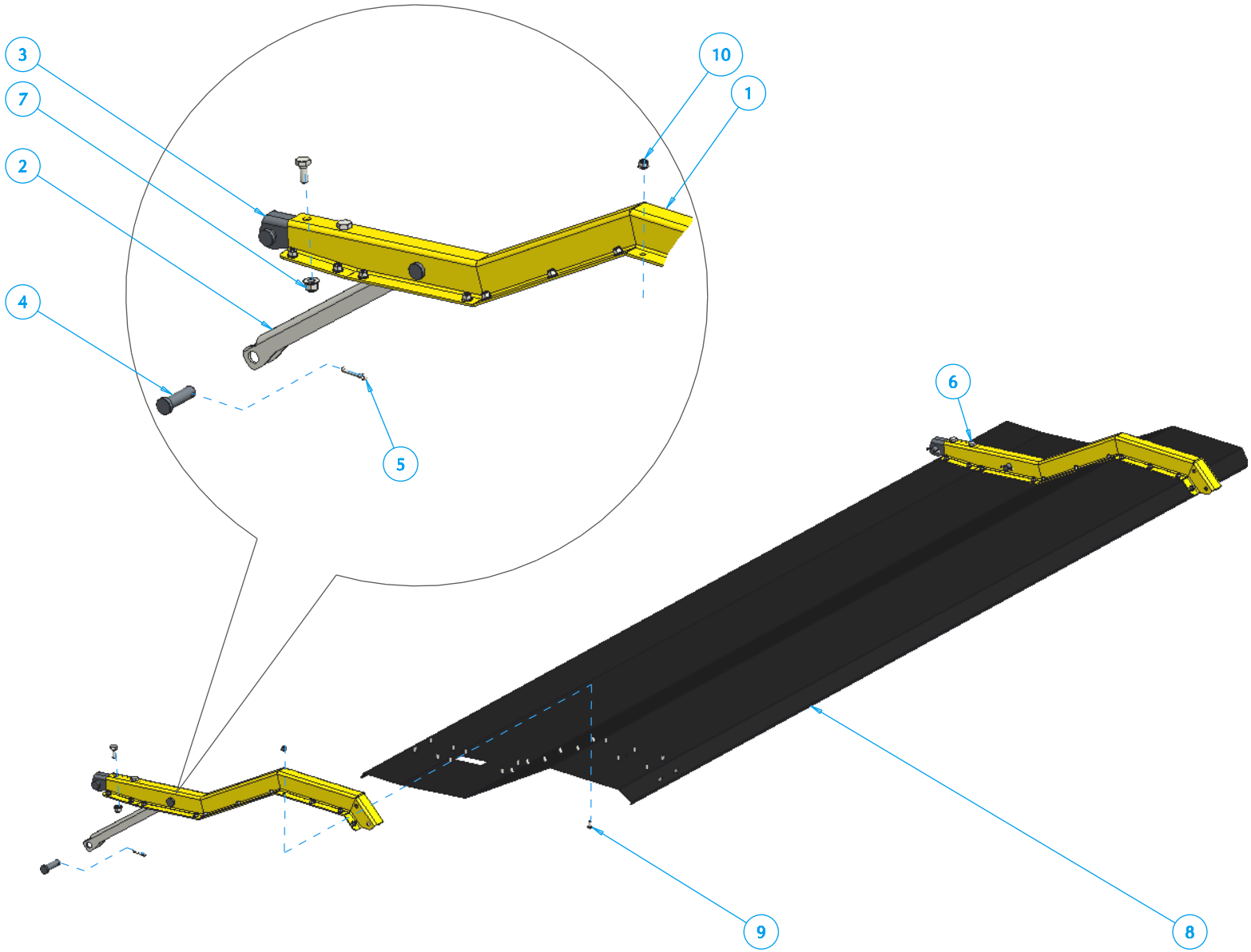
3
7
2
4
10
1
5
6
9
8

RT 1000 R13124-0000-M

Ref	Code	Qt	*Descrizione*	*Description*	*Designation*	*Beschreibung*
1	69 75	2	Braccio cop. superiore	Top arm cover for		
2	69 77	2	Puntello per copertura	Cover prop		
3	69 78	2	Terminale per cop.	Cover terminal		
4	69 74	6	Perno Ø16x53	Pin Ø16x53		
5	36 93	6	Copiglia UNI 1336 5X25	Splint UNI 1336 5x25		
6	26 81	4	Vite TE int.fil.UNI 573	Screw TEUNI 5739 M10x25		
7	22 29	4	Dado autobb. flangiato	Flanged self-locking nut		
8	69 76	1	Copertura sup. per 69	Top cover for 69 66		
9	34 49	44	Vite button flang. Ø 6\	Fl. button screw Ø 6x16		
10	25 22	44	Dado autobl.flangiato	Fl. self-locking nut M6		

ROC

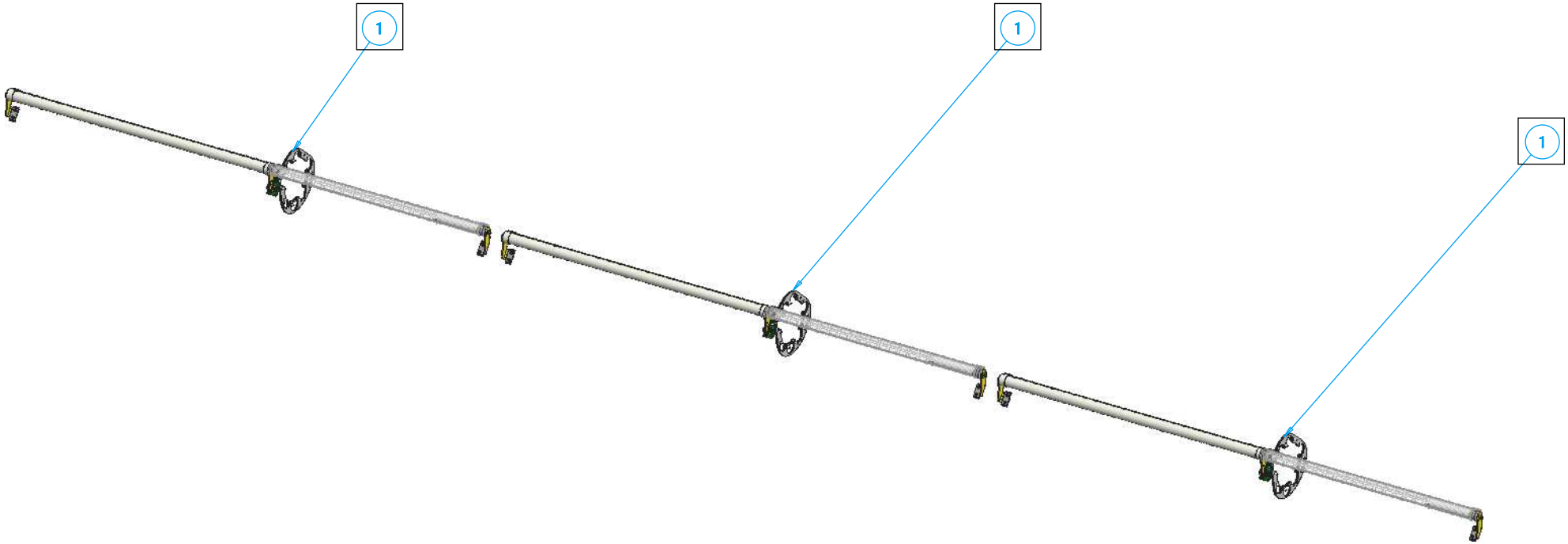
1
1
1

RT 1000

70 78 M

Ref	Code	Qt	*Descrizione*	*Description*	*Designation*	*Beschreibung*
1	70 30	3	Kit rullini pulitori sing. el. d	Kit cleaning rollers		

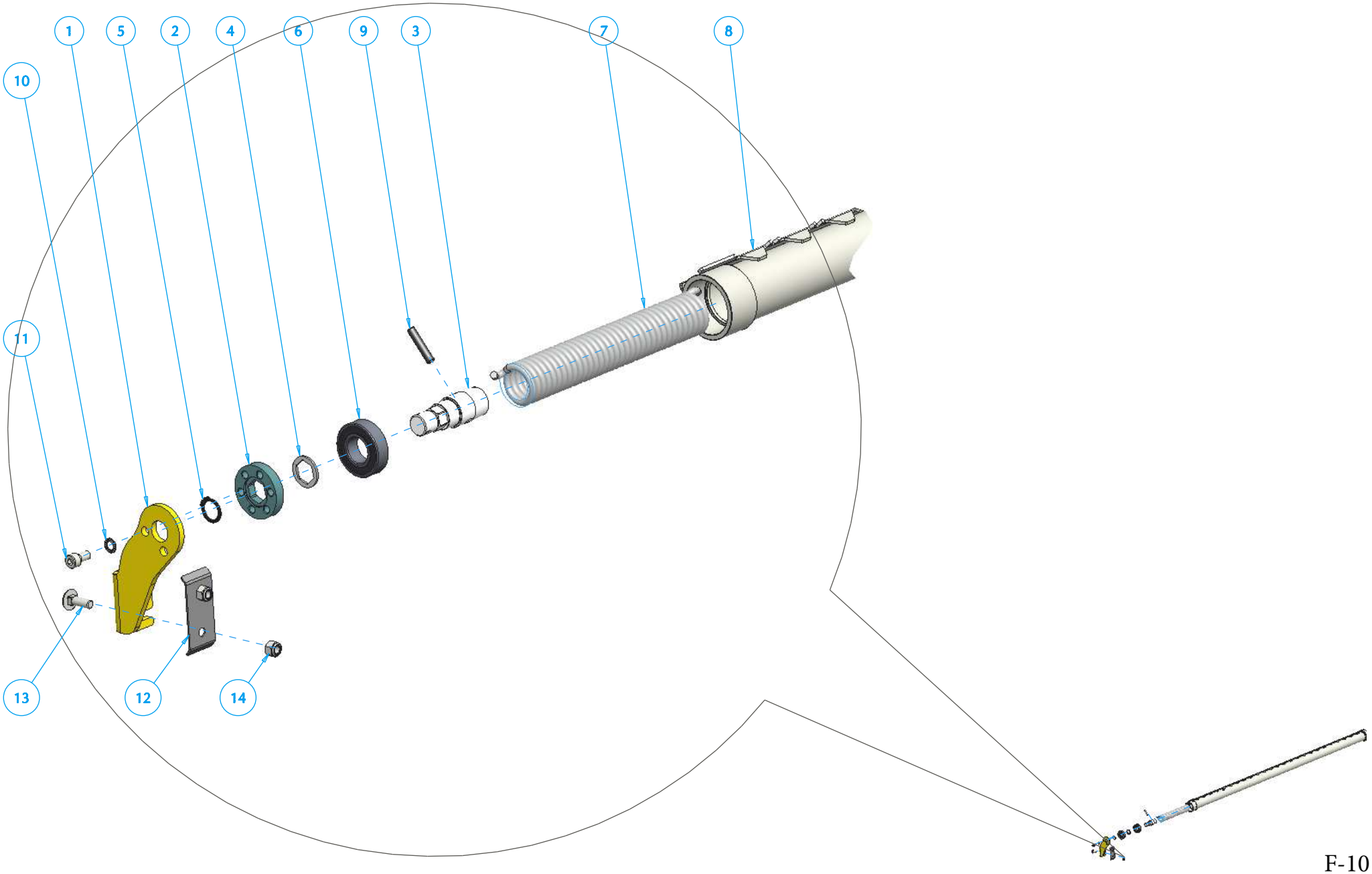
1
5
2
4
6
9
3
7
8
10
11
13
12
14

RT 1000

70_30-M1

Ref	Code	Qt	*Descrizione*	*Description*	*Designation*	*Beschreibung*
1	70 43	1	Supporto lat. sx	Left lateral support		
2	70 44	1	Tenditore per rullo pulitore	Clean. rollers tensioner		
3	70 45	1	Perno rullino pulitore	Clean.rollers pin		
4	70 46	1	Distanziale rullo pulitore	Clean. rollers spacer		
5	35_40	1	Seger i 20x1.75 UNI 7436	Seeger 20x1.75 UNI 7436		
6	00 32	1	Cuscinetto Ø25x52x15	Bearing Ø25x52x15		
7	37 29	1	Molla rullo pulitore SX	LEFT Clean. roller spring		
7Bis	37 30	1	Molla rullo pulitore DX	RIGHT Clean. roller spring		
8	70 38	1	Rullo pulitore per elemento 3 m	Clean. rollers for 3mt element		
9	37 19	1	Spina elastica Ø 8x36	Elastic plug Ø8x36		
10	22 07	1	Rondella zigrinata Ø 8	Knurled washer Ø 8		
11	03 88	1	Vite TCEI UNI5931 M8X16	Screw TCEI UNI 5931 M8X16		
12	71 03	1	Piastrino copriasole	Tag cap		
13	25 30	2	Vite quad. sotto testa 8x25x5	High square head screw 8x25x5		
14	29 30	2	Dado autobb. alto M 8 7473	Self-locking nut M6 6926		

RT 1000

ROC

70_30-M2

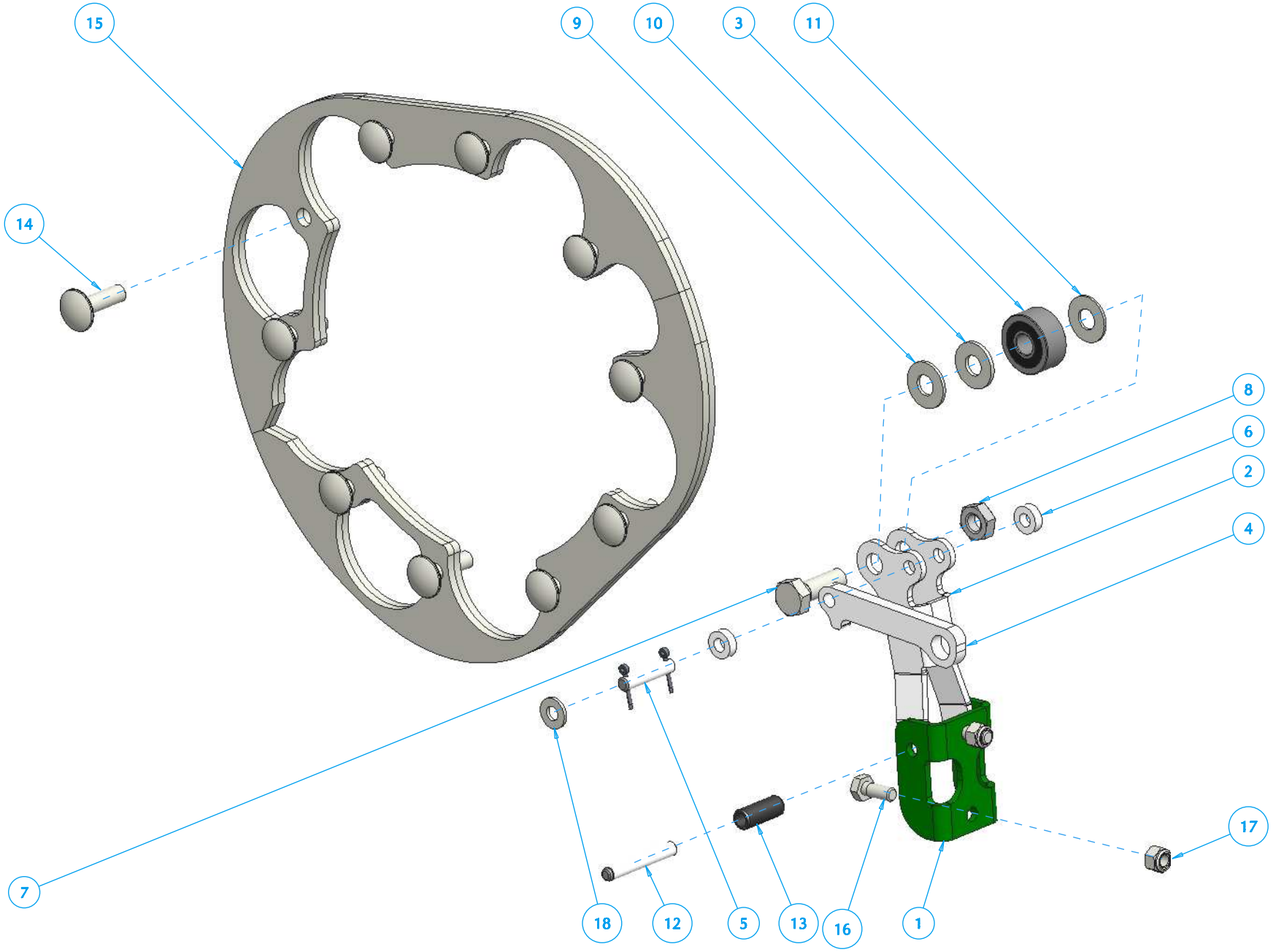

RT 1000 70_30-M2

Ref	Code	Qt	*Descrizione*	*Description*	*Designation*	*Beschreibung*
1	70 32	1	Supporto snodo rullini pul	Junction supp.for clean. rollers		
2	70 33	1	Snodo rullini pulitori	Cleaning rollers junction		
3	61 36	1	Cuscinetto acam	Acam bearing		
4	70 36	1	Bielletta rullini pulitori	Conn. rod for cleaning rollers		
5	37 24	1	Pernino Ø 8 X 40	Pin Ø8x40		
6	37 27	2	Boccola Ø 8 x 16 x 5.5	Plastic bushing Ø8x16 x 5.5		
7	30 53	1	Vite TE UNI 5739 M12X35	Screw TE UNI 5739 M12x35		
8	23 36	1	Dado esag. basso UNI5589	Hexagonal nut UNI5589 M12		
9	37 21	1	Rondella Ø 12x 27 x 2	Galvanized washer Ø12x27x2		
10	37 22	1	Rondella Ø 12x 27 x 2.5	Galvanized washer Ø12x27x2.5		
11	37 20	1	Rondella Ø 12x 27 x1.5	Galvanized washer Ø12x27x1.5		
12	37 25	1	Spina cilindrica Ø 8x55	Cylindrical tempered plug Ø8x55		
13	37 26	1	Spina elastica Ø 12x30	Elastic plug Ø12x30		
14	36 92	10	Vite 10x35x6	Squared screw 10x35x6		
15	70 42	4	Semi pista per pulitore	Half-track for cleaning roller		
16	23 22	2	Vite TE int.fil.UNI 5739	TE screw UNI 5739 M8X20		
17	29 30	2	Dado autobb. alto M 8	Self-locking nut M6 6926		
18	31 37	1	Rondella piana 8.5x18x2	Flat washer 8.5x18x2		

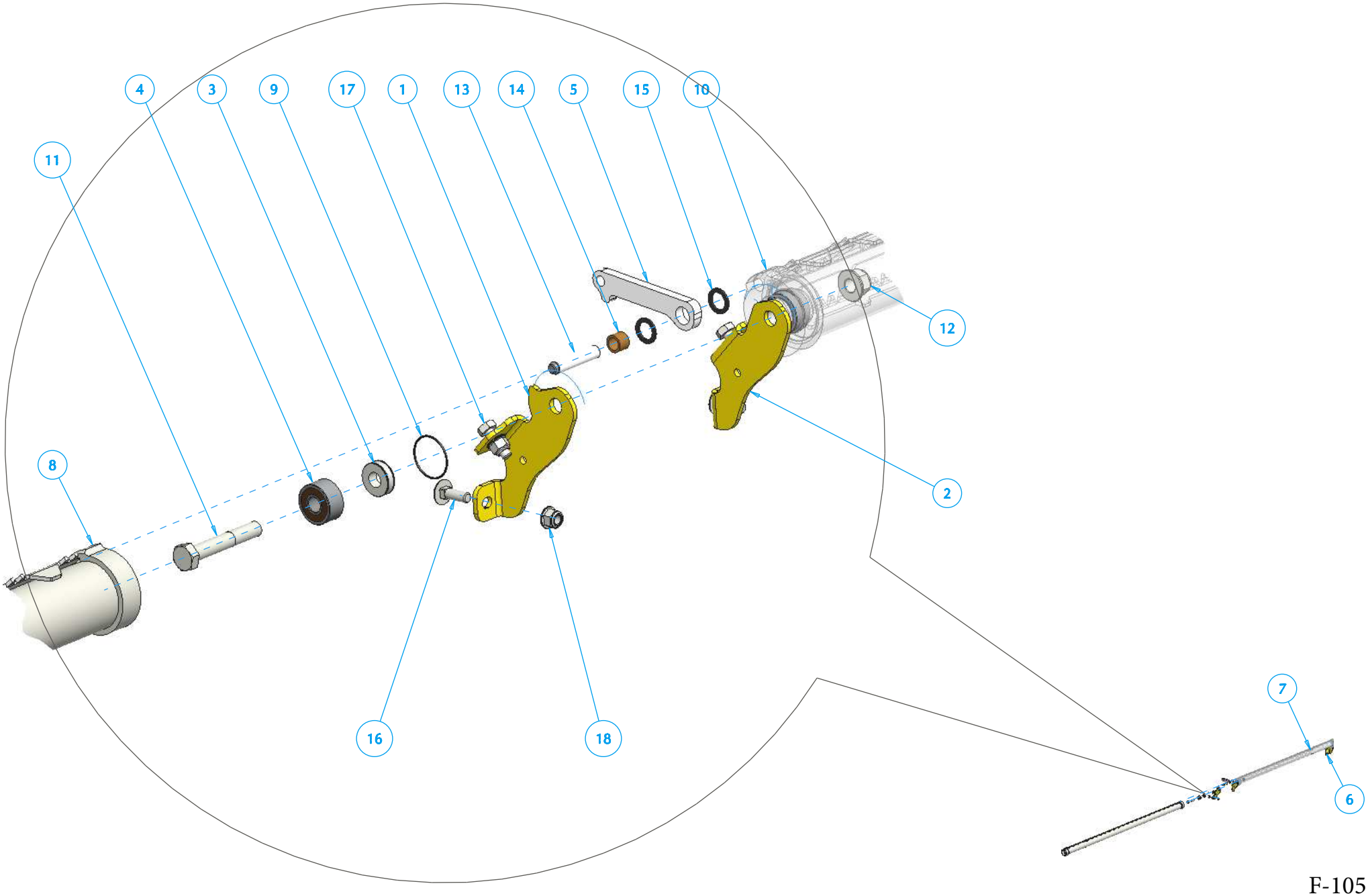
4
3
9
17
1
13
14
5
15
10
11
12
8
2
16
18
7
6

RT 1000 70_30_M3

Ref	Code	Qt	*Descrizione*	*Description*	*Designation*	*Beschreibung*
1	70 34	1	Supporto cent. sx	Central left support		
2	70 35	1	Supporto cent. dx	Central right support		
3	60 24	2	Distanziale per cuscinetto	Spacer for bearing		
4	69 65	2	Cuscinetto	Bearing		
5	70 36	1	Bielletta rullini pulitori	Conn. rod for clean.rollers		
6	70 37	1	Supporto lat. dx	Lateral right support		
7	37 30	1	Molla rullo pulitore DX	RIGHT cleaning roller spring		
8	70 38	1	Rullo pulitore per elemento	Clean.roller for 3mt.element		
9	37 28	2	O.R.31.47 X35.03 X1.78	O-ring 31.47		
10	70 39	1	Rullo pulitore per elemento	Clean.roller for 3mt.element		
11	25 71	1	Vite TE PARZ.FIL.UNI5737 M12	TE screw UNI5737		
12	25 24	1	Dado autobb. flangiato 12	Fl. self-locking nut 12		
13	37 23	1	Spina cilindrica temprata Ø10\	Cyl. tempered plug Ø10x50		
14	37 31	1	Boccolina bronzo sint. Ø10	Bronzed bushing Ø10x14		
15	37 32	2	Rondella in plastica Ø14	Plastic washer Ø14		
16	25 30	2	Vite quad. sotto testa 8x25x5	Square head screw 8x25x5		
17	23 23	2	Vite TE int.fil.UNI 5739 M8	TE screw UNI 5739 M8X25		
18	16 98	4	Dado autobb. flangiato 8 6926	Fl. self-locking nut 8 6926		

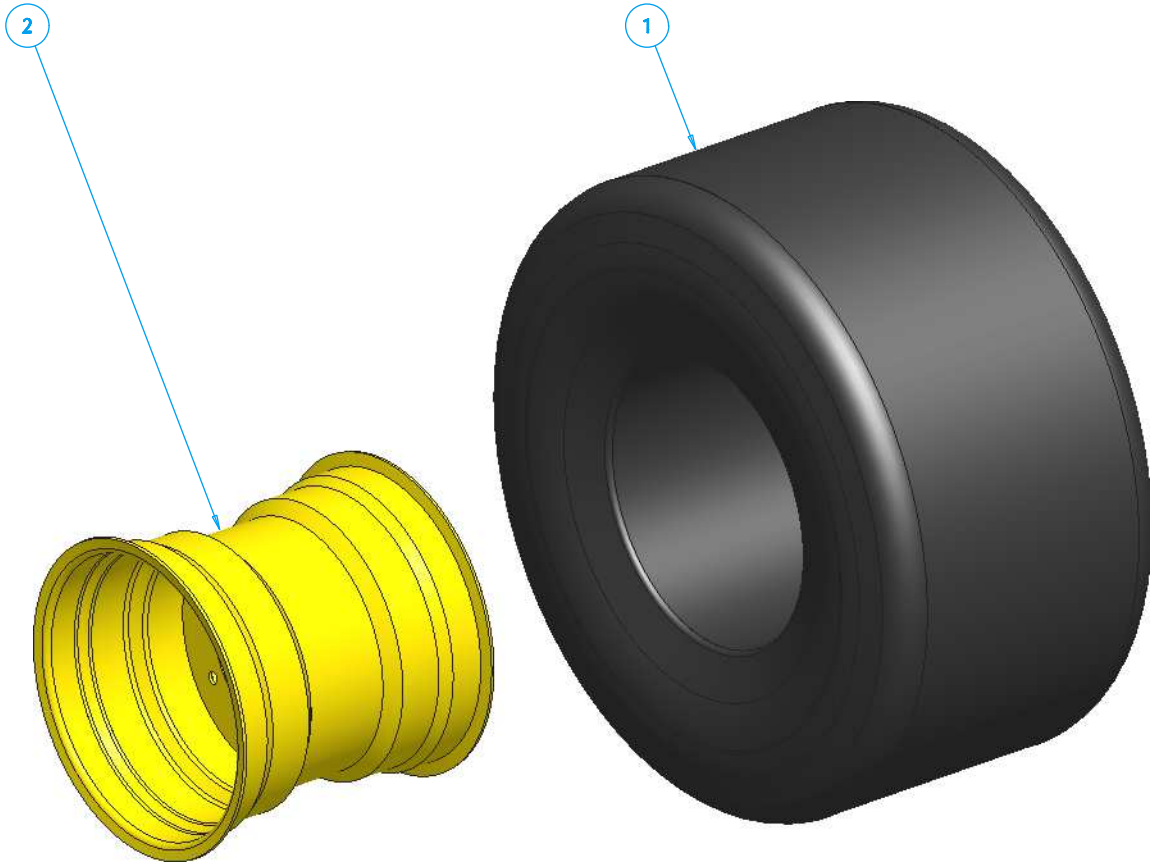
2
1

RT 1000

61_82-M

Ref	Code	Qt	*Descrizione*	*Description*	*Designation*	*Beschreibung*
1	63 69	1	Pneumatico 505/50R17	Tire 505/50R17		
2	63 68	1	Cerchio 16"x 17" 8 fori	8 holes rim 16"x17"		

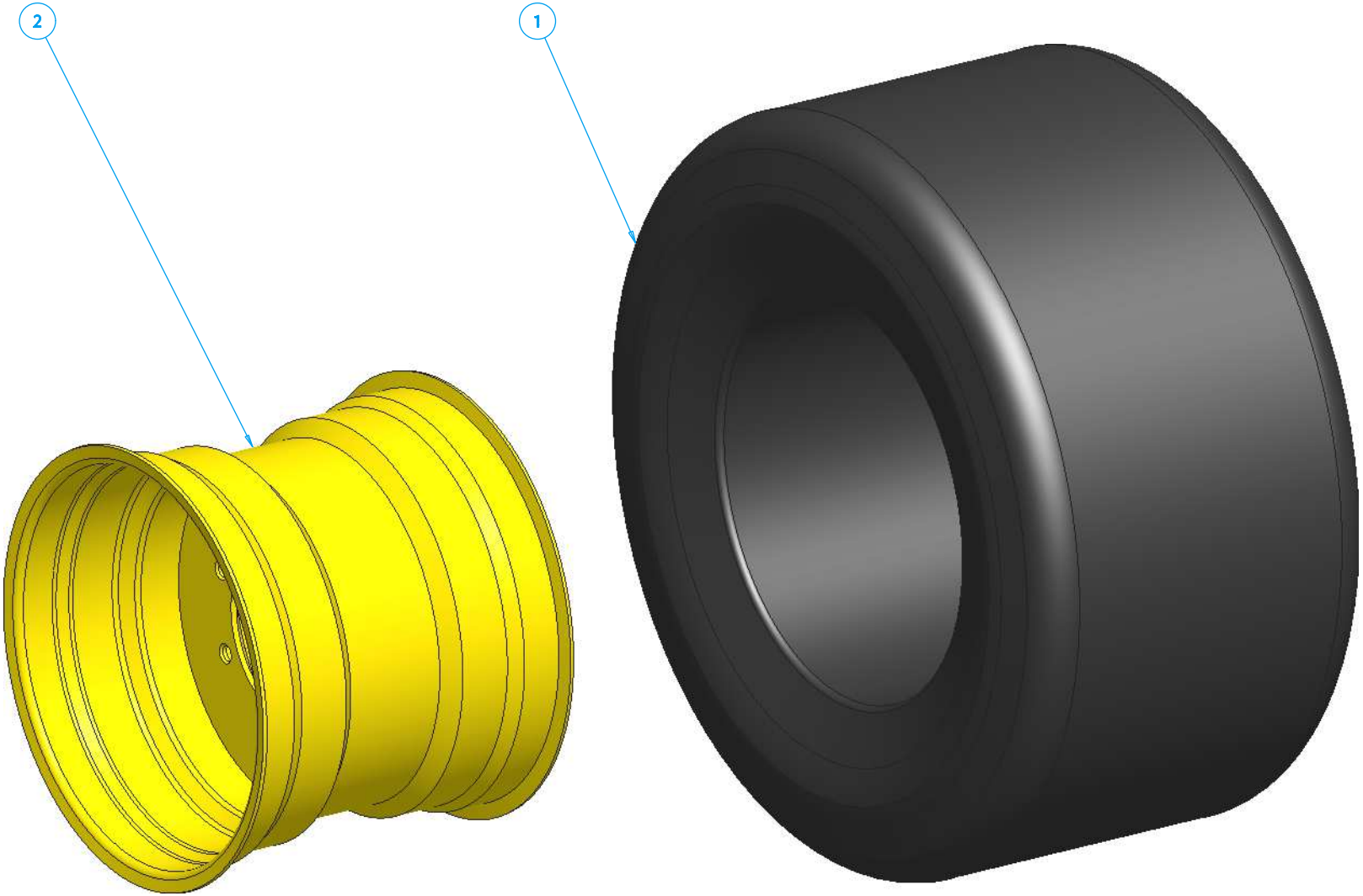
2
1

RT 1000

64_77_M

Ref	Code	Qt	*Descrizione*	*Description*	*Designation*	*Beschreibung*
1	64 15	1	Pneumatico 500/45R20	Tire 500/45R20		
2	64 14	1	Cerchio 16"x 20" 8 fori	8 holes rim 16"x20"		

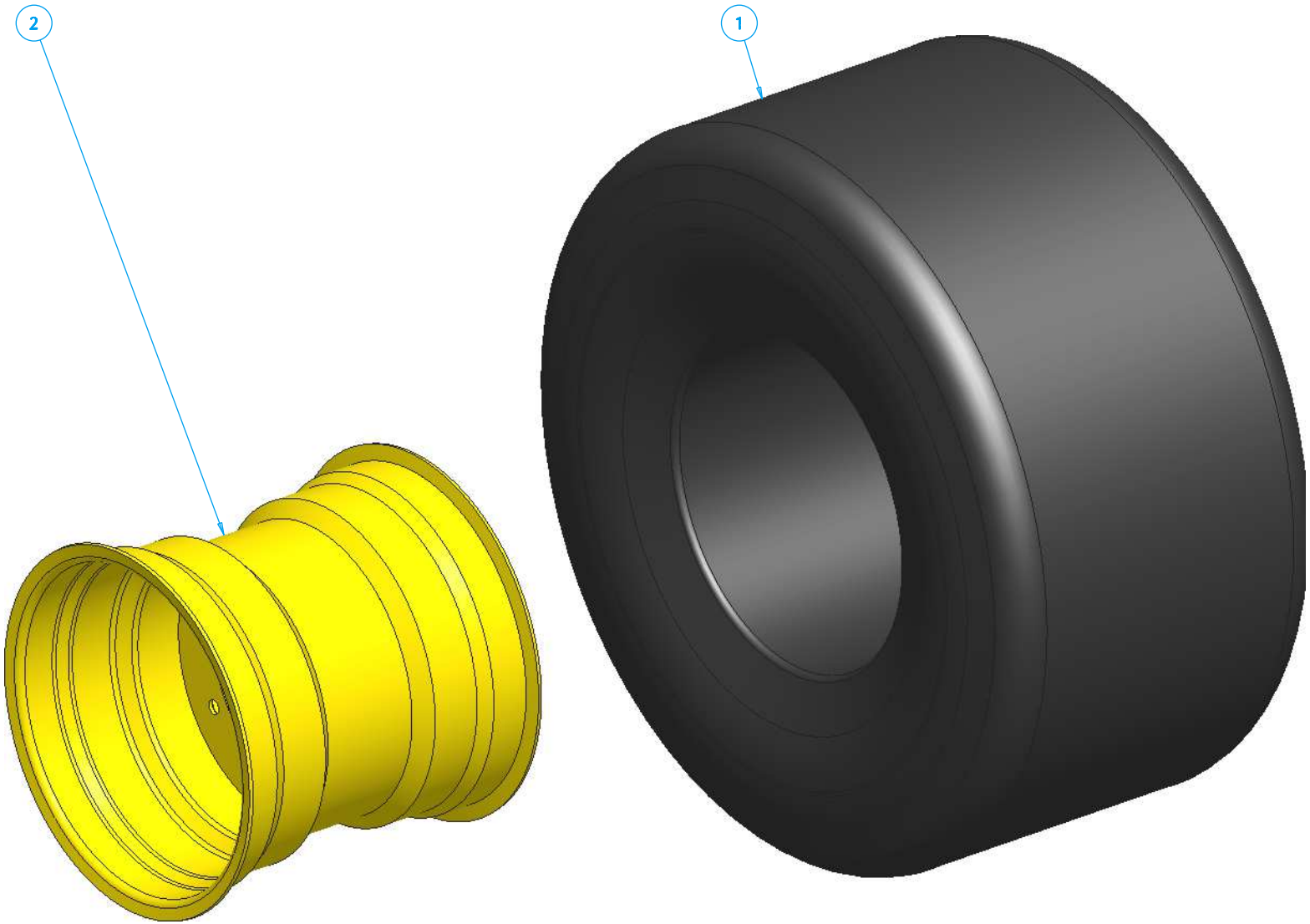
2
1

RT 1000

64_85_M

Ref	Code	Qt	*Descrizione*	*Description*	*Designation*	*Beschreibung*
1	63 69	1	Pneumatico 505/50R17	Tire 505/50R17		
2	63 68	1	Cerchio 16"x 17" 8 fori	8 holes rim 16"x17"		

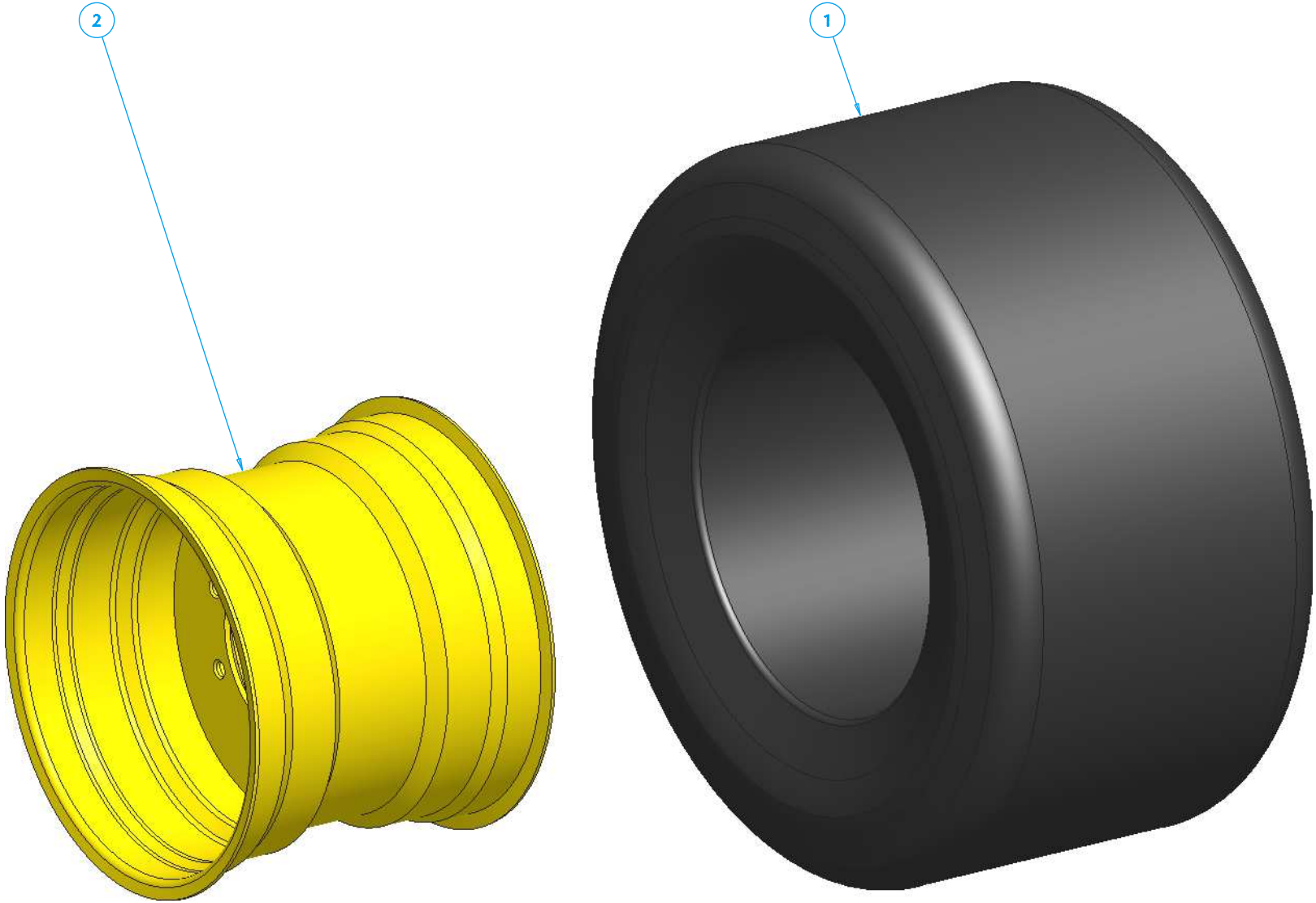
2
1

RT 1000

64_13-M

Ref	Code	Qt	*Descrizione*	*Description*	*Designation*	*Beschreibung*
1	64 15	1	Pneumatico 500/45R20	Tire 500/45R20		
2	64 14	1	Cerchio 16"x 20" 8 fori	8 holes rim 16"x20"		

1

2

3

8

4

5

6

7

10

9

RT 1000

ROC

DECALS

Ref	Code	Qt	Descrizione	Description	Designation	Descripción
1						
2						
3						
4						
5						
6						
7						
8						
9						
10						

RT 1000

ROC

DECALS

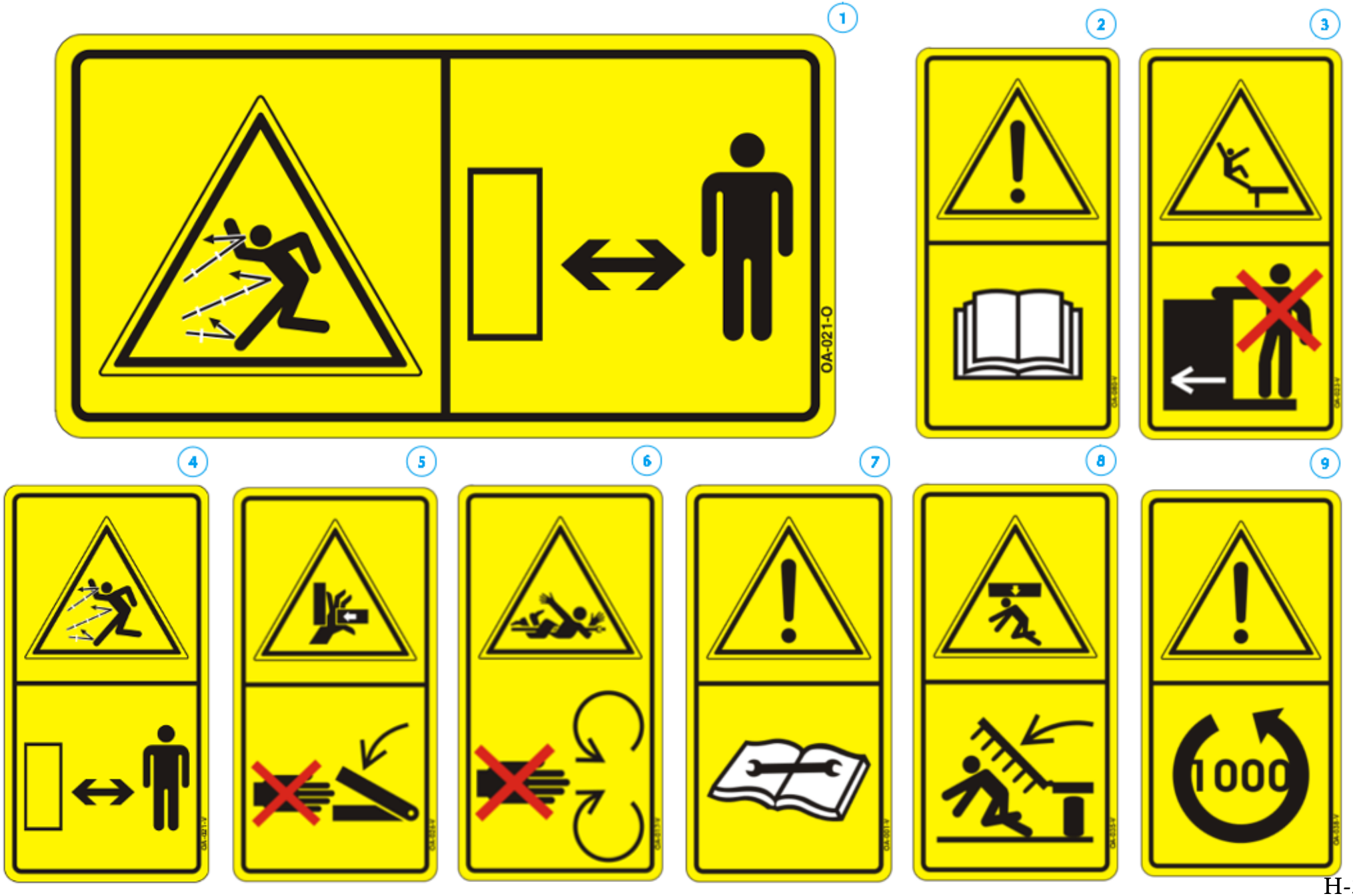

RT 1000

ROC

DECALS

Ref	Code	Qt	Descrizione	Description	Designation	Descripción
1						
2						
3						
4						
5						
6						
7						
8						
9						

1

2

Patented

3

RT 1000

4

RT 1000

ROC

DECALS

Ref	Code	Qt	Descrizione	Description	Designation	Descripción
1						
2						
3						
4						

RT 1000

ROC

IMPIANTO ELETTRICO A

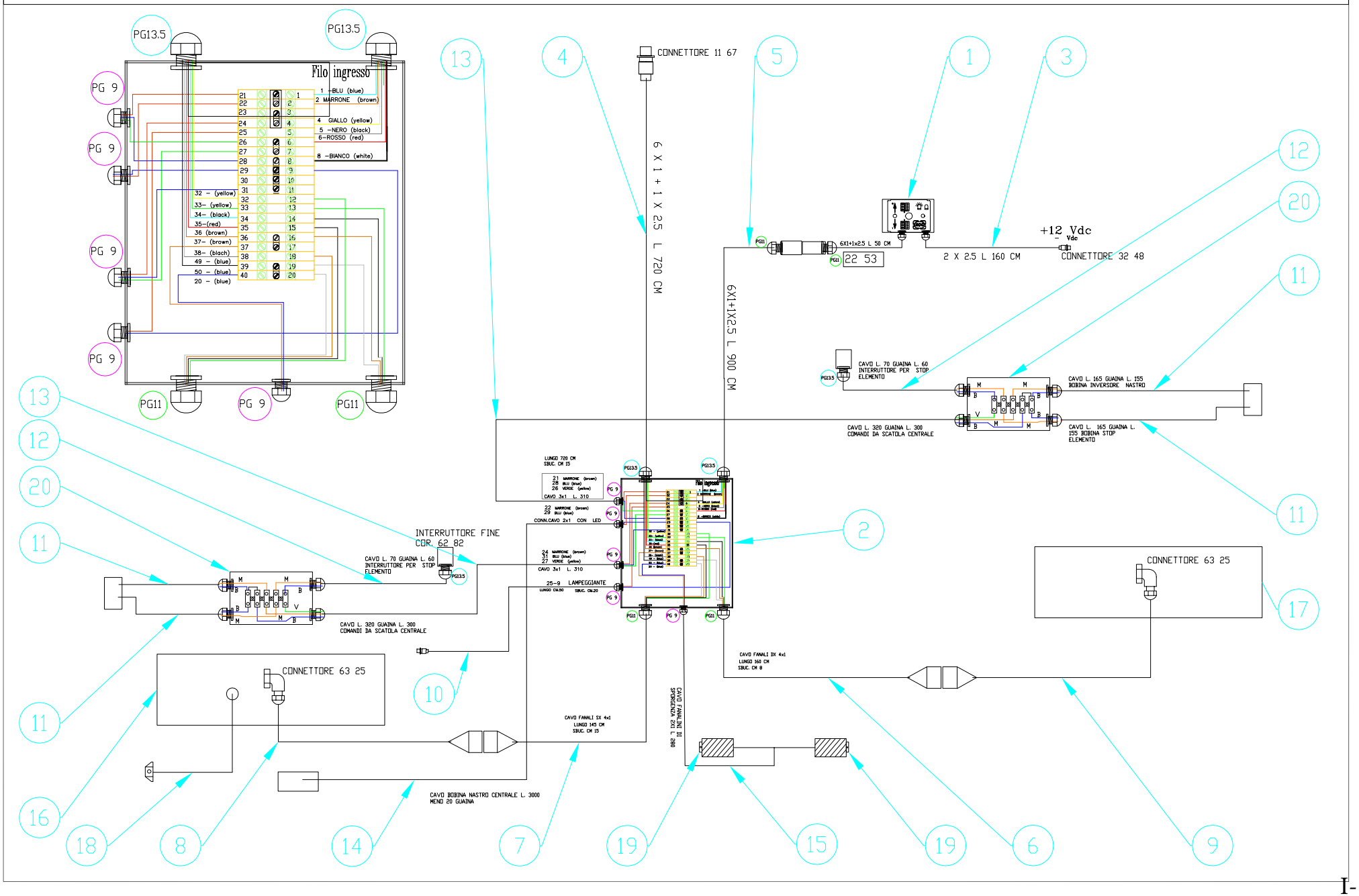

RT 1000 IMPIANTO ELETTRICO A

Ref	Code	Qt	Descrizione	Description	Designation	Beschreibung
1	62 19	1	Gscatola comando bordo tratt.	Electric control box		
2	69 50	1	Scatola di derivazione	Derivation box		
3	62 21	1	Cavo di alimentazione Rt	Control gearbox wire		
4	68 23	1	Cavo alimentazione fanali Rt	Lights contr.gearbox wire		
5	62 27	1	Cavo alimentazione scatola der.	Derivation gearbox wire		
6	68 14	1	Cavo fanali dx fino giunz.	Right headlights wire end		
7	68 15	1	Cavo fanali sx fino giunz.	Left headlights wire end		
8	68 17	1	Cavo fanali sx	Right headlights wire		
9	68 30	1	Cavo fanali dx	Left headlights wire		
10	68 29	1	Cavo connettore lamp.	Connecting wire		
11	68 18	4	Cavo bobina lat. Rt 1000-1220	Lateral coil wire		
12	68 19	2	Cavo interruttore lat.	Lateral switch cable		
13	68 20	2	Cavo comando scatola lat.	Lateral gearbox wire		
14	68 25	1	Cavo bobina cent.	Central coil wire		
15	68 24	1	Cavo luci sporgenza	Protrusion lights wire		
16	67 24	1	Fanale multifunzione sx	Multifunctional left light		
17	67 25	1	Fanale multifunzione dx	Multifunctional right channel		
18	67 28	1	Cavo fanalino targa led	Plate taillight wire		
19	67 22	2	Fanalino led di sporgenza	Protrusion taillight led		
20	65 97	2	Scatola di derivazione lat.	Lateral derivation gearbox		

RT 1000

ROC

IMPIANTO ELETTRICO B

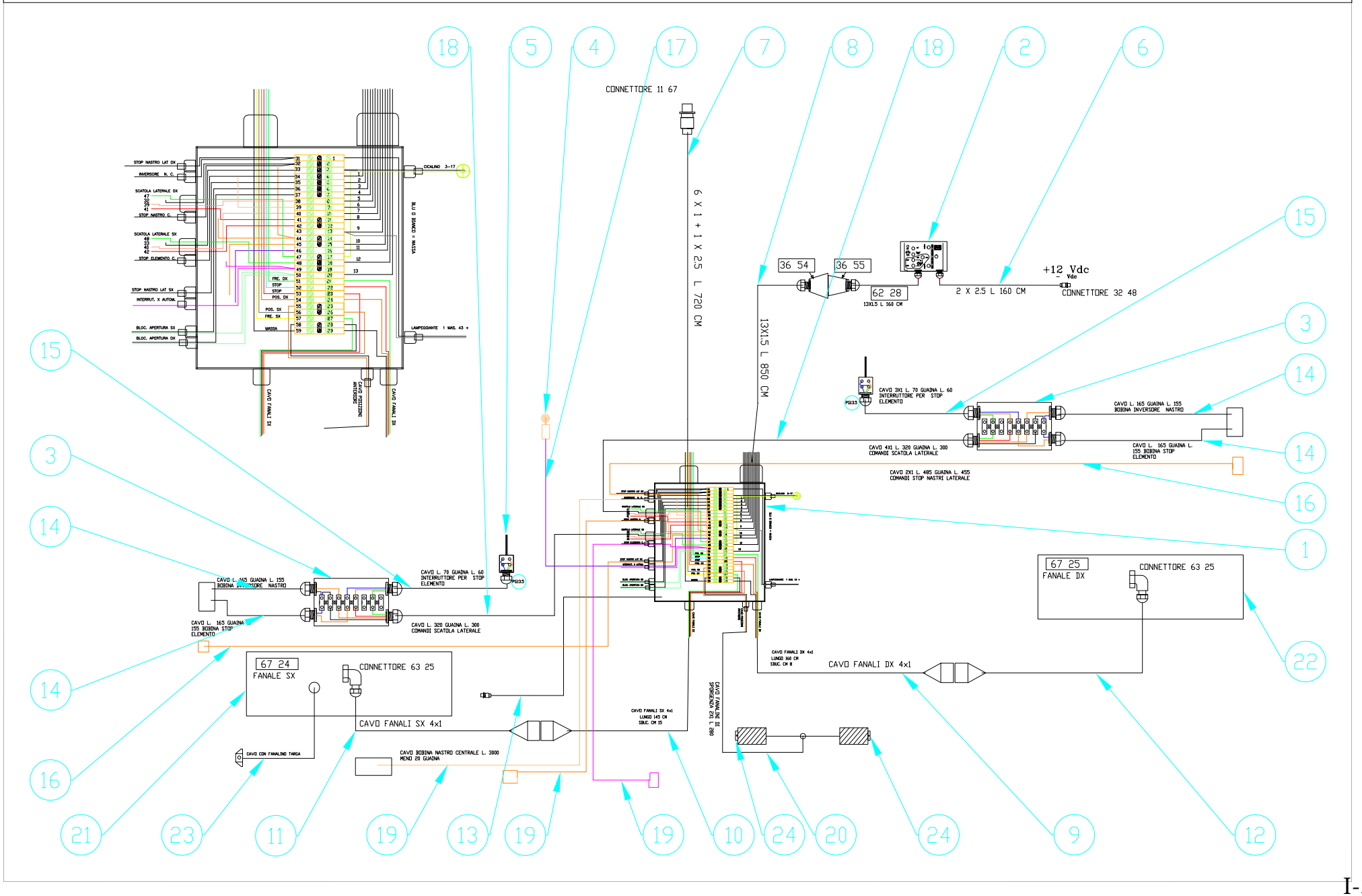

RT 1000 IMPIANTO ELETTRICO B

Ref	Code	Qt	Descrizione	Description	Designation	Beschreibung
1	64 91	1	Scatola derivaz. bordo macchina	Cabled derivation gearbox		
2	69 48	1	Scatola comando bordo tratt.	Electric control box		
3	65 97	1	Scatola derivazione laterale	Lateral derivation box		
4	69 53	1	Interruttore finecorsa ruot.	Wheel end gearbox		
5	62 82	1	Interruttore finecorsa ad asta	Stroke switch		
6	62 21	1	Cavo alimentazione Rt	Control gearbox wire		
7	68 23	1	Cavo alimentazione fanali Rt.	Headlights contr.gearbox wire		
8	69 49	1	Cavo comandi Rt 13 poli	Rt 13 gearbox wire		
9	68 14	1	Cavo fanali dx fino giunz.	Right headlights wire end		
10	68 15	1	Cavo fanali sx fino giunz.	Left headlights wire end		
11	68 17	1	Cavo fanali sx	Right headlights wire		
12	68 30	1	Cavo fanali dx	Left headlights wire		
13	68 29	1	Cavo connettore lamp.	Lamp connecting wire		
14	68 18	4	Cavo bobina lat.	Lateral coil wire		
15	69 41	2	Cavo interruttore laterale	Lateral switch wire		
16	70 48	2	Cavo bobina stop nastro	Lateral stop belt coil		
17	70 49	1	Cavo interruttore automatico	Automatic switch cable		
18	69 51	2	Cavo comando scatola lat.	Lateral gearbox wire		
19	68 25	3	Cavo bobina cent.	Central coil wire		
20	68 24	1	Cavo luci di sporgenza	Protrusion light wire		
21	67 24	1	Fanale multifunzione sx	Multif. left headlight		
22	67 25	1	Fanale multifunzione dx	Multif. right headlight		
23	67 28	1	Cavo fanalino targa led	Plate taillight wire		
24	67 22	2	Fanalino led di sporgenza	Protrusion taillight led		

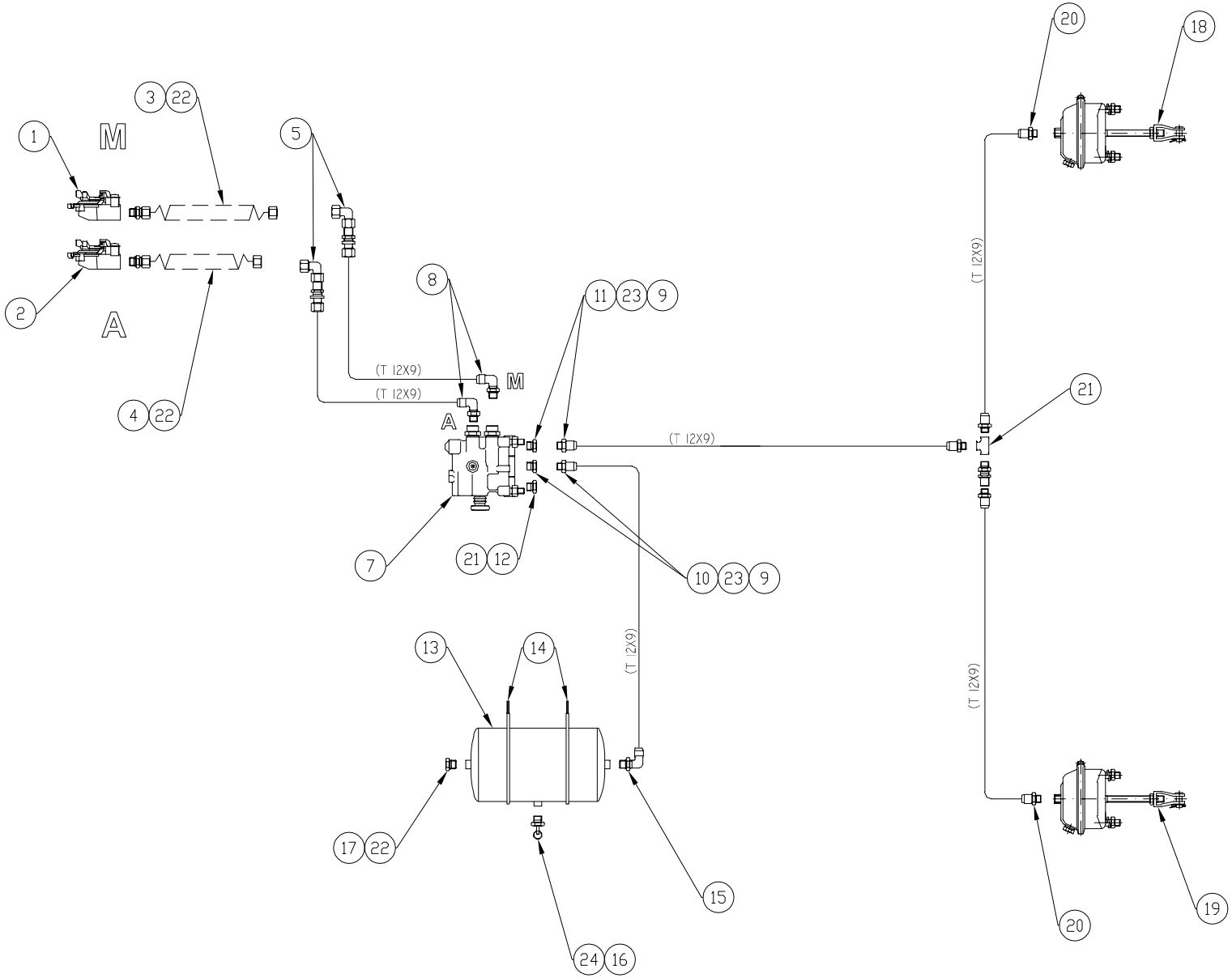
1
M
3
22
2
A
4
22
5
8
(T 12X9)
(T 12X9)
M
A
11
23
9
(T 12X9)
7
21
12
10
23
9
13
14
(T 12X9)
17
22
24
16
15
20
18
(T 12X9)
21
(T 12X9)
20
19

RT 1000 64_48-M

Ref	Code	Qt	Descrizione	Description	Designation	Beschreibung
1	68 58	1	Giunto acc. ISO Giallo M16x1.5	Yellow joint M16x15		
2	68 57	1	Giunto acc. ISO Rosso M16x1.5	Red joint M16x15		
3	68 56	1	Sp. gialla 12x9-MM16x1.5-FM18x1.5	Yellow plug 12x9		
4	68 55	1	Sp. rossa 12x9-MM16x1.5-FM18x1.5	Red plug 12x9		
5	35 97	2	Gomito di cong. e attr. T12 -T12	Air angle self-conn.T12-T12		
6	36 24	2	Boccola di rinforzo T12x9	Support bushing T12X9		
7	69 01	1	Servoautodistributore 2 uscite	Self-distributor 2 exits		
8	36 09	2	Gomito c/o-ring T12x9-M22x1.5	C/O-ring angle T12x9		
9	36 10	2	Diritto di giun. M30x1.5 - F22x1,5	Slick junction air angle		
10	36 11	1	Terminale diritto T16x12-M22x1.5	Air angle pipe conn. T16x12		
11	36 12	1	Terminale diritto T12x9-M22x1.5	Air angle pipe conn. T12x6		
12	36 13	1	Tappo M30x1.5	Air angle pipe cork M30x1.5		
13	64 49	1	Serbatoio 20lt D250 omologato	Air container 20lt		
14	64 50	2	Tiranti D250	Connecting rod M10 for Ø250		
15	36 14	1	Gomito c/o-ring T16x12-M22x1.5	c/O-ring angle T16x12		
16	36 15	1	Valvola spurgo manuale M22x1.5	Air valve manual cleaner conn.		
17	36 16	1	Tappo M22x1.5	Air cork connection M22x1.5		
18	64 51	1	Brake chamber 12" con for. dx	Brake chamber 12"		
19	69 30	1	Brake chamber 12" con for. sx	Brake chamber 12"		
20	36 17	2	Terminale diritto T12x9-M16x1.5	Air slick end conn. T12x9		
21	36 18	1	Adattatore 3 vie F16x1,5	Air 3 ways adaptor connector		
	36 19	1	Diritto di attrav.	Slick air crossing connection		
	36 17	3	Terminale diritto T12x9-M16x1.5	Air slick end conn.T12x9		
22	36 20	2	Rondella in alluminio D16	Aluminum washer D16		
23	36 22	3	Rondella in alluminio D30	Aluminum washer D30		
24	36 23	2	Rondella in alluminio D22	Aluminum washer D22		

RT 1000 FINO MATR.

ROC

IMPIANTO IDRAULICO

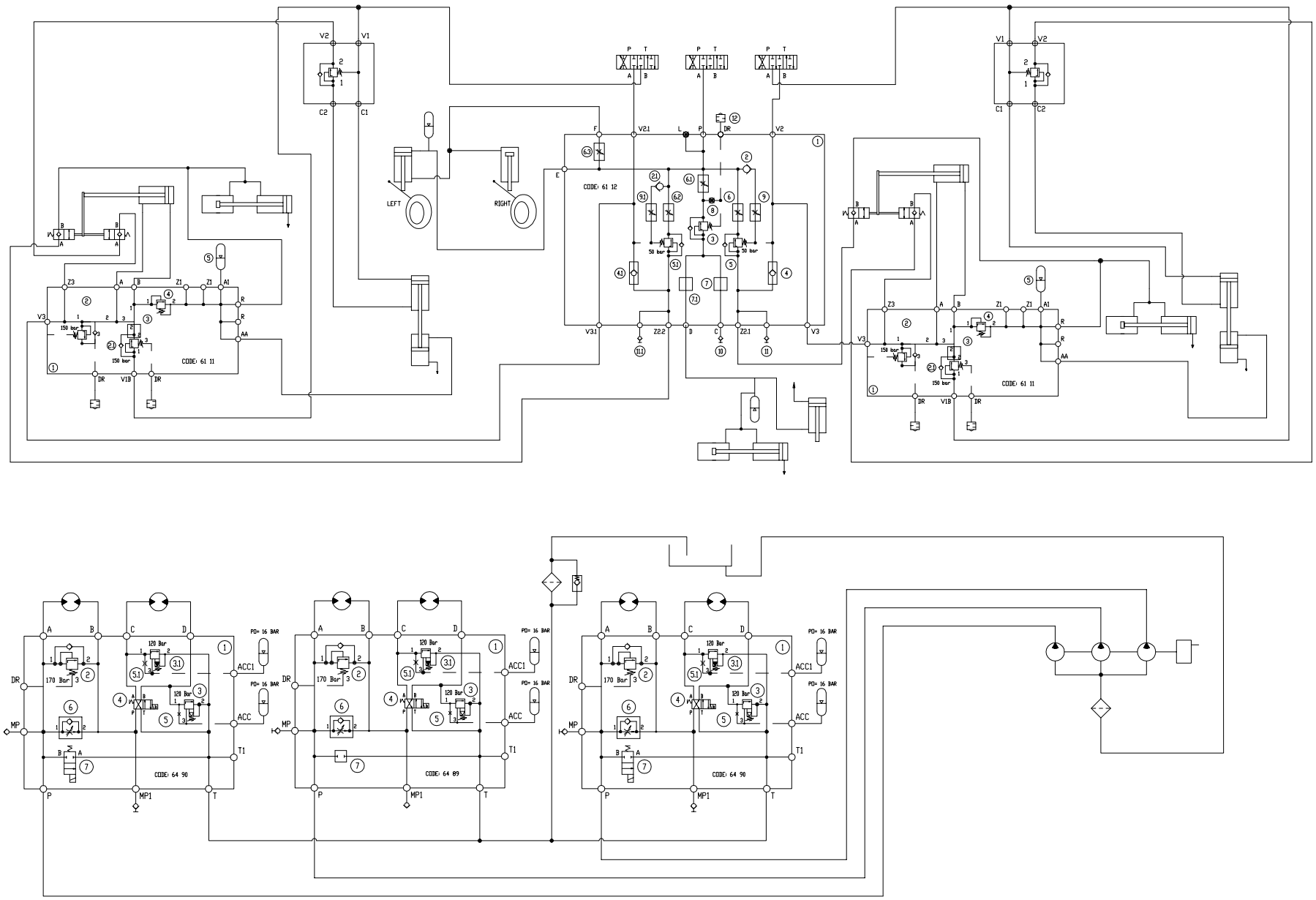

RT 1000

ROC
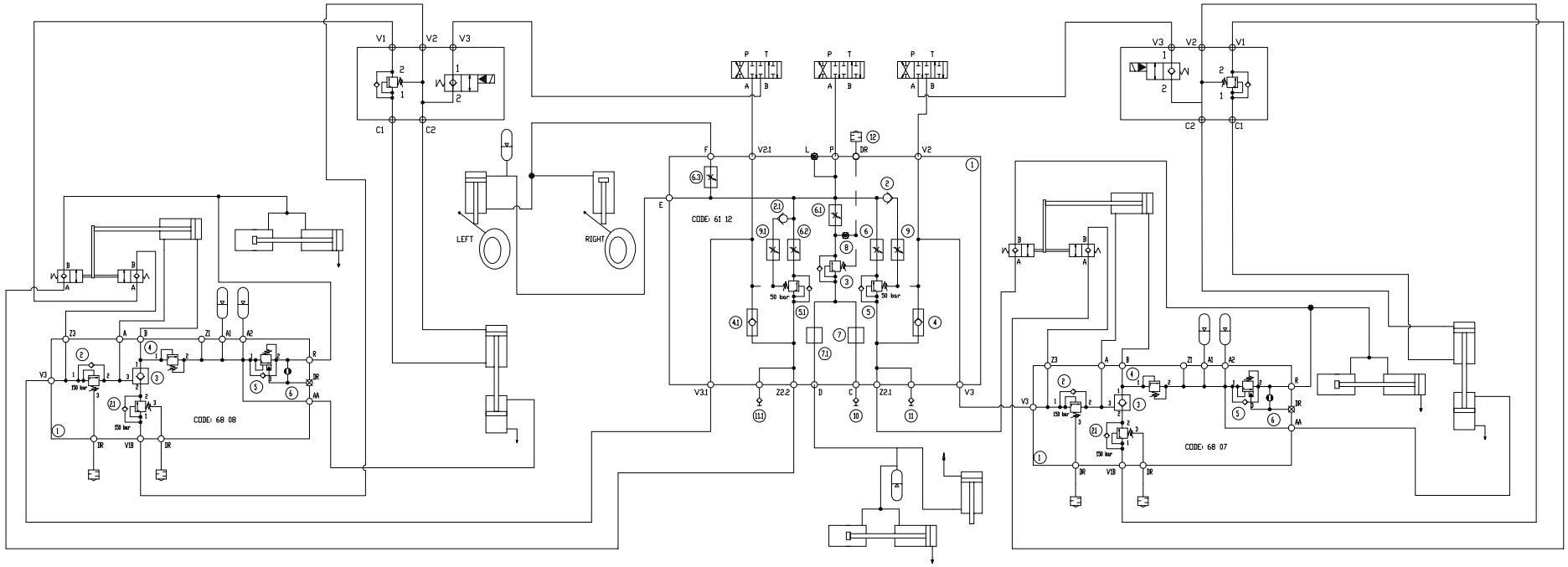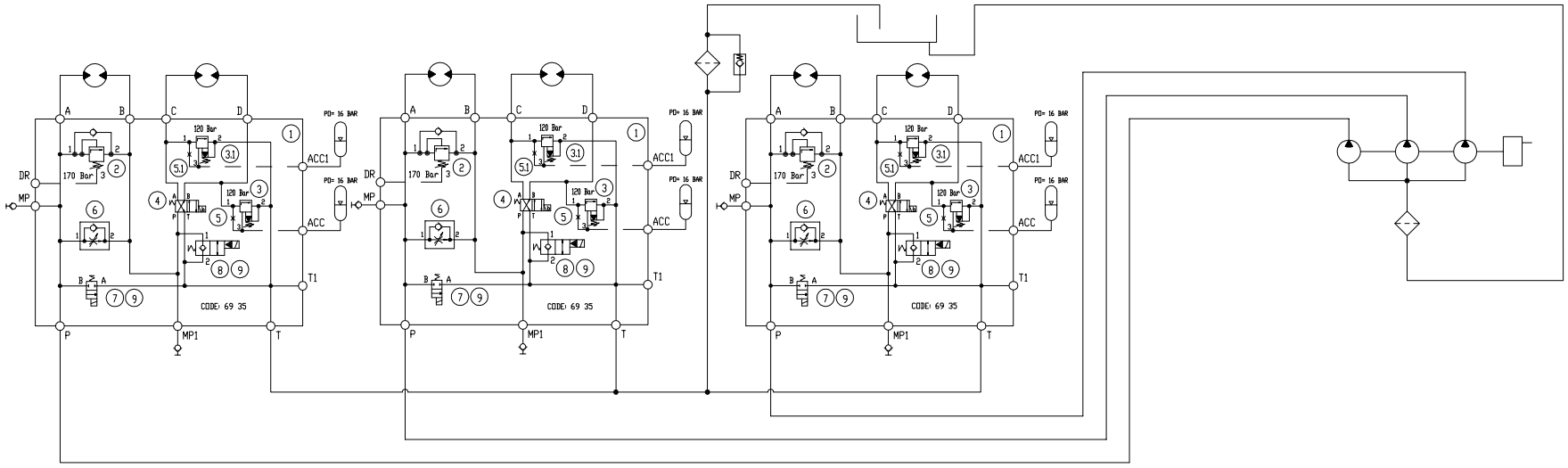
IMPIANTO IDRAULICO